Connectors and In-Series Adapters

1.0/2.3 Series 1
2.9mm (and Semi-Rigid Soldering Tips) 2
3.5mm 3
7-16 DIN 4-5
BNC - 50 Ohm 6-12
BNC - 75 Ohm (and Connector Mating Tips) 13-16
F 17
FME 18
MCX 19
MMCX 20
MHV 21
N Type 22-27
QMA (Quick Mate) 28
RCA 29
SMA 30-34
SMB - 50 Ohm 35-36
SMZ (Type 43) 37
Mini-SMB - 75 Ohm 38
SSMB 39
TNC - 50 Ohm 40-43
TNC - 75 Ohm 44
UHF 45-47
Mini-UHF 48-50
WiFi and Broadband 51-56

Your customer needs connectors

Your customer is in the middle of a project and realizes they need crucial connectors. RF Connectors houses one of the largest inventories of coaxial connectors in North America. That means they're shipped immediately. When the clock is ticking and the dollars are adding up, ask for RF Connectors brand.

RF Connectors is a Division of RF Industries

MALE

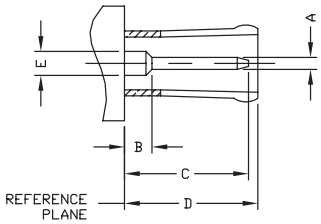

LETTER	INCHES [MILLIMITERS]	
	MINIMUM	MAXIMUM
A	.019 [0.48]	.021 [0.52]
B	–	.045 [1.14]
C	–	.217 [5.51]
D	.213 [5.41]	.224 [5.69]
E	.039 [0.99]	.040 [1.02]

FEMALE

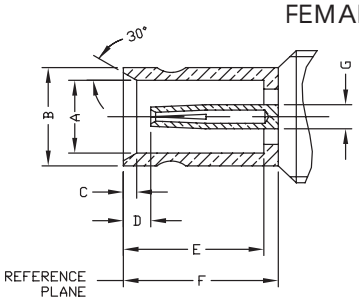

LETTER	INCHES [MILLIMITERS]	
	MINIMUM	MAXIMUM
A	.118 [3.00]	.120 [3.05]
B	.159 [4.04]	.163 [4.14]
C	.020 [0.51]	.024 [0.61]
D	.045 [1.14]	–
E	.228 [5.79]	.232 [5.89]
F	.252 [6.40]	.256 [6.50]
G	.039 [0.99]	.040 [1.02]

SPECIFICATIONS

ELECTRICAL SPECIFICATIONS
IMPEDANCE: 50 Ω
WORKING VOLTAGE RATING: 250 VRMS @ SEA LEVEL
FREQUENCY RANGE: 0-4 GHz

MECHANICAL SPECIFICATIONS
CABLING: CRIMP AND PCB SOLDER
INTERFACE: CECC 22230

PLATING
N - NICKEL
G - GOLD

DIELECTRIC MATERIAL
T - TEFLON

CABLE GROUPS

GRP	FOR THESE CABLE TYPES
B	TIMES LMR-100A; RG-174, 188, 188A, 316/U; ALPHA 9174, 9316; BELDEN 7805A, 8216, 83269, 83284, 84316; COMMSCOPE AMC-174
B1	RG-316/U DOUBLE SHIELD; RD-316

FOR A MORE EXTENSIVE LISTING OF CABLE GROUPS, PLEASE REFER TO PAGES 131-133.

FIG. 1
RF123-7000-B

FIG. 2
RF123-7000-B-03, -B1

FIG. 3
RF123-7001-B

FIG. 4
RF123-7002-B

FIG. 5
RF123-7050-1B, -1B1

FIG. 6
RF123-7052-1B

FIG. 7
RF123-7300-1

FIG. 8
RF123-7350-1

PHOTOS FOR REFERENCE ONLY, SHOWN AT 150% ACTUAL SIZE.

FOR MOUNTING CONFIGURATIONS REFER TO PAGES 137-151

PART #	FIG	DESCRIPTION	CBL GRP	NOTES	PLATING			RECOMMENDED TOOL
					BDY	P/C	DIE	
RF123-7000-B	1	MALE SNAP ON CRIMP	B	FOR RG-174/U	N	G	T	RFA-4009-204
RF123-7000-B-03	2	MALE PUSH ON CRIMP	B,B1	FOR RG-174/U, RG-316/U & RG-316/U DOUBLE SHIELD	N	G	T	RFA-4009-204
RF123-7000-B1	2	MALE SNAP ON CRIMP	B1	FOR RG-174/U & RG-316/U DOUBLE-SHIELD	N	G	T	RFA-4009-204
RF123-7001-B	3	MALE SLIDE ON CRIMP	B	FOR RG-174/U	N	G	T	RFA-4009-204
RF123-7002-B	4	MALE SCREW ON CRIMP	B	FOR RG-174/U	N	G	T	RFA-4005-300
RF123-7050-1B	5	FEMALE SLIDE ON CRIMP	B	FOR RG-174/U	G	G	T	RFA-4009-204
RF123-7050-1B1	5	FEMALE SLIDE ON CRIMP	B,B1	FOR RG-174/U, RG-316/U & RG-316/U DOUBLE SHIELD	G	G	T	RFA-4009-204
RF123-7052-1B	6	FEMALE CRIMP BULKHEAD	B	WITH DOUBLE D FLAT, FOR RG-174/U	G	G	T	RFA-4009-204
RF123-7300-1	7	FEMALE RIGHT ANGLE PCB BULKHEAD		WITH DOUBLE D FLAT, 4 LEG	G	G	T	
RF123-7350-1	8	FEMALE VERTICAL PCB BULKHEAD		4 LEG	G	G	T	

2.9mm

PLUG

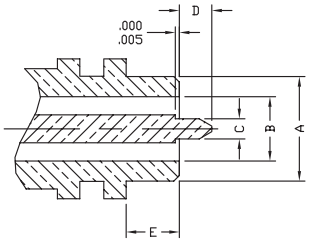

LETTER	INCHES [MILLIMITERS]	
	MINIMUM	MAXIMUM
A	.1783 [4.53]	.1807 [4.59]
B	.1147 [2.91]	.1154 [2.93]
C	.0354 [0.90]	.0366 [0.93]
D	.060 [1.52]	.070 [1.78]
E	.092 [2.34]	.096 [2.44]

JACK

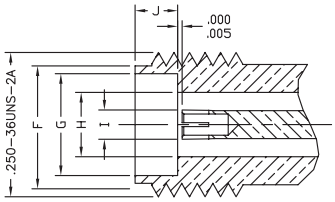

LETTER	INCHES [MILLIMITERS]	
	MINIMUM	MAXIMUM
F	.208 [5.28]	.212 [5.38]
G	.181 [4.60]	.183 [4.65]
H	.1146 [2.91]	.1154 [2.93]
I	.0496 [1.26]	.0504 [1.28]
J	.075 [1.91]	.077 [1.96]

SPECIFICATIONS

ELECTRICAL SPECIFICATIONS
IMPEDANCE: 50 Ω
WORKING VOLTAGE RATING: 250 VRMS
FREQUENCY RANGE: 0-40 GHz

MECHANICAL SPECIFICATIONS
MATING: .250 - 36 THREAD
DURABILITY: 500 CYCLES MINIMUM
CABLING: SOLDER

PLATING
G - GOLD

DIELECTRIC MATERIAL
T - TEFLON

CABLE GROUPS

GRP	FOR THESE CABLE TYPES
SR1	.085 SEMI RIGID; RG-405/U; BELDEN 1671A; RD-179

FOR A MORE EXTENSIVE LISTING OF CABLE GROUPS, PLEASE REFER TO PAGES 131-133.

FIG. 1
RF29M-SR1

PHOTOS FOR REFERENCE ONLY, SHOWN AT 200% ACTUAL SIZE.

FOR MOUNTING CONFIGURATIONS REFER TO PAGES 137-151

PART #	FIG	DESCRIPTION	CBL GRP	NOTES	PLATING		
					BDY	P/C	DIE
RF29M-SR1	1	PLUG	SR1	DIRECT SOLDER	G	G	T

SEMI-RIGID CABLE SOLDERING TIPS

- Always avoid excessive heat when soldering.
- Use an active flux such as Kester #2331 when soldering semi-rigid cable to nickel-plated connector bodies.
- Fixture cable and solder ferrule or cable and connector body firmly when soldering to the jacket of semi-rigid cable.
- Work rapidly during soldering operations and cool the new joints by brushing with alcohol.
- Carefully follow the semi-rigid cable manufacturer's instructions for cable thermal cycling procedures.

For more information or custom products call us or go to our website. See cover for contact information.

MALE

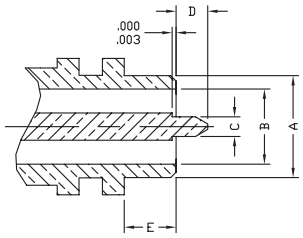

LETTER	INCHES [MILLIMITERS]	
	MINIMUM	MAXIMUM
A	.1783 [4.53]	.1807 [4.59]
B	.1374 [3.49]	.1383 [3.51]
C	.0354 [0.90]	.0366 [0.93]
D	.060 [1.52]	.070 [1.78]
E	.092 [2.34]	.096 [2.44]

FEMALE

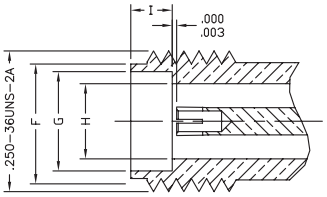

LETTER	INCHES [MILLIMITERS]	
	MINIMUM	MAXIMUM
F	.208 [5.28]	.212 [5.38]
G	.181 [4.60]	.183 [4.65]
H	.1374 [3.49]	.1382 [3.51]
I	.075 [1.91]	.077 [1.96]

SPECIFICATIONS

PLATING
G - GOLD
SS - STAINLESS STEEL

DIELECTRIC
R - REXOLITE

GENERAL SPECIFICATIONS
MATERIALS: BODY: STAINLESS STEEL, CORROSION-RESISTANT, NON-MAGNETIC 303, PER ASTM A484 AND A582. CONTACTS: BERYLLIUM COPPER, QQ-C 530, ALLOY 173. DIELECTRIC: REXOLITE®
FINISH: CENTER CONTACTS ARE GOLD PLATED PER MIL-G- 45204 TYPE II, CLASS 1 OVER NICKEL PLATE PER QQ-N-290. BODY AND BODY COMPONENTS ARE PASSIVATED PER ASTM A380.

ELECTRICAL SPECIFICATIONS
NOMINAL IMPEDANCE: 50 Ω
FREQUENCY: DC-34 GHZ
VSWR: 1.05 + .006 F (F=GHZ) MAX. DC-34 GHZ
CONTACT RESISTANCE: CENTER CONTACT = 3.0 MILLIOHMS, OUTER CONTACT = 2.0 MILLIOHMS

MECHANICAL SPECIFICATIONS
CONNECTOR DURABILITY: 500 CYCLES MINIMUM
CONTACT TORQUE: 4.0 INCH-OUNCES MINIMUM
COUPLING NUT MATING TORQUE: 8-10 LBS

ENVIRONMENTAL SPECIFICATIONS
TEMPERATURE RATING: -55° C TO +105° C

FIG. 1
RF35F-35F-00000

FIG. 2
RF35M-35F-00000

FIG. 3
RF35M-35M-00000, -G0000

PHOTOS FOR REFERENCE ONLY, SHOWN AT 150% ACTUAL SIZE.

PART #	FIG	DESCRIPTION	NOTES	PLATING		
				BDY	P/C	DIE
RF35F-35F-00000	1	ADAPTER	3.5mm Female to 3.5mm Female	SS	G	R
RF35M-35F-00000	2	ADAPTER	3.5mm Male to 3.5mm Female	SS	G	R
RF35M-35M-00000	3	BULKHEAD ADAPTER	3.5mm Male to 3.5mm Male	SS	G	R
RF35M-35M-G0000	3	ADAPTER	3.5mm Male to 3.5mm Male	G	G	R

Have ALL YOUR 3.5mm adapters in one convenient storage kit.
See page 118 for more information.

RFA-4031-01

7-16 DIN

MALE

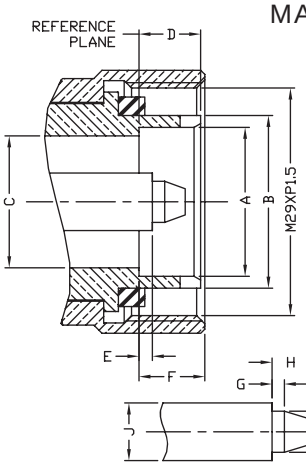

LETTER	INCHES [MILLIMITERS]	
	MINIMUM	MAXIMUM
A	.710 [18.03]	.717 [18.21]
B	.812 [20.60]	.843 [21.40]
C	.624 [15.85]	.640 [16.25]
D	.276 [7.00]	.315 [8.00]
E	.058 [1.47]	.070 [1.77]
F	.276 [7.00]	.355 [9.00]
G	.055 [1.40]	.063 [1.60]
H	–	.177 [4.50]
I	.195 [4.96]	.199 [5.04]
J	.275 [6.97]	.277 [7.03]

FEMALE

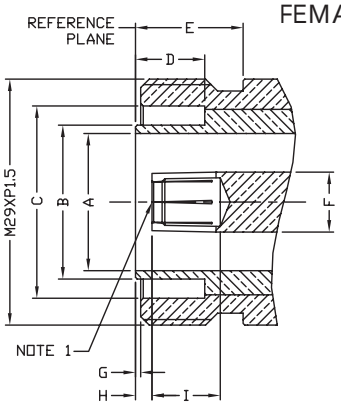

LETTER	INCHES [MILLIMITERS]	
	MINIMUM	MAXIMUM
A	.624 [15.85]	.640 [16.25]
B	–	.709 [18.00]
C	.871 [22.10]	.902 [22.90]
D	.319 [8.10]	–
E	.394 [10.00]	–
F	.275 [6.97]	.277 [7.03]
G	.020 [0.50]	.028 [0.70]
H	.070 [1.77]	.082 [2.07]
I	.197 [5.00]	–

NOTE 1: I.D. TO MEET VSWR AND CONTACT RESISTANCE WHEN MATED WITH .195/.198 DIA. PIN

SPECIFICATIONS

ELECTRICAL SPECIFICATIONS
IMPEDANCE: 50 Ω
WORKING VOLTAGE RATING: 2700 VRMS
FREQUENCY RANGE: DC TO 7.5 GHz

MECHANICAL SPECIFICATIONS
MATING: M 29-1.5 THREADED COUPLING
INTERFACE: ITL-SPEC-CECC-22190
CABLING: CLAMP, SOLDER AND CRIMP

PLATING
S - SILVER

DIELECTRIC MATERIAL
T - TEFLON

CABLE GROUPS

GRP	FOR THESE CABLE TYPES
C	TIMES LMR-195; RG-58, 58A, 58C, 141, 141A/U; ANDREW CNT-195, CNT-195-DB, CNT-195-FR; BELDEN 8219, 8240, 8259, 8262, 9201, 9203, 9310, 9311; COMMSCOPE WBC-195, WBC-195R, 0268, TCOM-195, TCOM-195-FR; HARBOUR HPF195
C1	RG-55, 55A, 55B, 142, 142A, 142B, 223, 400/U; ALPHA 9055, 9055B, 9223; BELDEN 7806A, 83242, 84142
C2	TIMES LMR-200, MSI-22; ALPHA 9848; BELDEN 7807A; COMMSCOPE AMC-58, WBC-200, WBC-200R, TCOM-200, TCOM-200-FR; HARBOUR HPF200
E	TIMES AA-4478; RG-8, 8A, 213/U; ALPHA 9008, 9213; BELDEN 8267, 9251, 9880, 89880; INTERCOMP 4082, 22132
F	RG-9, 9A, 9B, 214/U; ALPHA 9214; BELDEN 8242, 8268
I	TIMES AA-5886, AA-6146, LMR-400, LMR-400 ULTRAFLEX; RG-8/U TYPE; ANDREW CNT-400, CNT-400AL, CNT-400-DB, CNT-400-FR, CNT-400-FRP; BELDEN 7810A, 8214, 9913; COMMSCOPE TCOM-400, TCOM-400-FR, TCOM-400-PUR, WBC-400, WBC-400R, CUSHCRAFT ULTRALINK TL93605; HARBOUR HPF400
L2	TIMES LMR-600, LMR-600 ULTRAFLEX; ANDREW CNT-600, CNT-600-DB, CNT-600-FR, ; COMMSCOPE TCOM-600, TCOM-600-FR, TCOM-600-PUR, WBC-600, WBC-600R
PL	BELDEN 89913
SR1	.085 SEMI RIGID; RG-405/U; BELDEN 1671A; RD-179
SR2	.141 SEMI RIGID; RG-402/U; BELDEN 1673A
SR3	.250 SEMI RIGID; RG-401/U
X	TIMES LMR-240, LMR-240 ULTRAFLEX; RG-8X; ANDREW CNT-240, CNT-240AL, CNT-240ALS, CNT-240-DB, CNT-240-FR, CNT-240-W; BELDEN 9258; COMMSCOPE TCOM-240, TCOM-240-FR, WBC-240, WBC-240R; HARBOUR HPF240; MICRO 8/U; REMEE 1600; SAXTON 8315

FOR A MORE EXTENSIVE LISTING OF CABLE GROUPS, PLEASE PAGES 131-139.

Combination Connectors

Our 7-16 DIN combination connectors offer great versatility, allowing assembly in either a right-angle or straight position. The images on this page illustrate both configuation possibilities.

FIG. 1
RFD-1604-2I, -2L2

FIG. 2
RFD-1605-2-C, -2-C1, 2-X

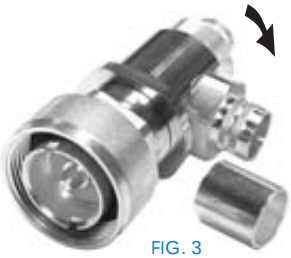

FIG. 3
RFD-1605-2-E, -2-L2

FIG. 4
RFD-1625-2-E

FIG. 5
RFD-1630-2-C, -2-C1

FIG. 6
RFD-1630-2-E

FIG. 7
RFD-1631-2L2

FIG. 8
RFD-1640-2

FIG. 9
RFD-1643-HS

FIG. 10
RFD-1644-2SR1, -2SR2, -2SR3

FIG. 11
RFD-1650-2

FIG. 12
RFD-1652-2

FIG. 13
RFD-1653-2

FIG. 14
RFD-1658-2

FIG. 15
RFD-1660-2

PHOTOS FOR REFERENCE ONLY, SHOWN AT 60% ACTUAL SIZE

FOR MOUNTING CONFIGURATIONS REFER TO PAGES 137-151

PART #	FIG	DESCRIPTION	CBL GRP	NOTES	PLATING			RECOM-MENDED TOOL
					BDY	P/C	DIE	
RFD-1604-2I	1	MALE CRIMP	I	STRAIGHT, FOR BELDEN 9913 & TIMES LMR-400	S	S	T	RFA-4009-205
RFD-1604-2L2	1	MALE CRIMP	L2	STRAIGHT, FOR TIMES LMR-600	S	S	T	RFA-4009-201
RFD-1605-2-C	2	MALE CRIMP	C, C2	COMBINATION STRAIGHT OR RIGHT ANGLE, FOR RG-58/U & TIMES LMR-200	S	S	T	RFA-4009-206
RFD-1605-2-C1	2	MALE CRIMP	C1	COMBINATION STRAIGHT OR RIGHT ANGLE, FOR RG-142/U & RG-55/U	S	S	T	RFA-4009-206
RFD-1605-2-E	3	MALE CRIMP	E, F, I, PL	COMBINATION STRAIGHT OR RIGHT ANGLE, FOR RG-8/U, RG-214/U, BELDEN 9913 & BELDEN 89913 PLENUM	S	S	T	RFA-4009-205
RFD-1605-2-L2	3	MALE CRIMP	L2	COMBINATION STRAIGHT OR RIGHT ANGLE, FOR TIMES LMR-600	S	S	T	RFA-4009-201
RFD-1605-2-X	2	MALE CRIMP	X	COMBINATION STRAIGHT OR RIGHT ANGLE, FOR RG-8/X & TIMES LMR-240	S	S	T	RFA-4009-203
RFD-1625-2-E	4	FEMALE CLAMP	E, I, PL	COMBINATION STRAIGHT OR RIGHT ANGLE, FOR RG-8/U, BELDEN 9913 & BELDEN 89913 PLENUM	S	S	T	
RFD-1630-2-C	5	FEMALE CRIMP	C, C2	COMB. STRAIGHT OR R/A, FOR RG-58/U & TIMES LMR-200	S	S	T	RFA-4009-206
RFD-1630-2-C1	5	FEMALE CRIMP	C1	COMBINATION STRAIGHT OR RIGHT ANGLE, FOR RG-142/U	S	S	T	RFA-4009-206
RFD-1630-2-E	6	FEMALE CRIMP	E, I, PL	COMBINATION STRAIGHT OR RIGHT ANGLE, FOR RG-8/U, BELDEN 9913 & BELDEN 89913 PLENUM	S	S	T	RFA-4009-205
RFD-1631-2L2	7	FEMALE CRIMP	L2	STRAIGHT, FOR TIMES LMR-600	S	S	T	RFA-4009-201
RFD-1640-2	8	FEMALE PANEL MOUNT		4-HOLE FLANGE WITH .111 ID SOLDER CUP	S	S	T	
RFD-1643-HS	9	FEMALE		4-HOLE FLANGE RECEPTACLE	S	S	S	
RFD-1644-2SR1	10	FEMALE	SR1	4-HOLE FLANGE, S,S,T; FOR .085 SEMI RIGID CABLE				
RFD-1644-2SR2	10	FEMALE PANEL MOUNT	SR2	4 HOLE FLANGE FOR .141 SEMI-RIGID	S	S	T	
RFD-1644-2SR3	10	FEMALE PANEL MOUNT	SR3	4 HOLE FLANGE FOR .250 SEMI-RIGID	S	S	T	
RFD-1650-2	11	BARREL ADAPTER		7-16 DIN MALE TO 7-16 DIN MALE	S	S	T	
RFD-1652-2	12	RIGHT ANGLE ADAPTER		7-16 DIN MALE TO 7-16 DIN FEMALE	S	S	T	
RFD-1653-2	13	BARREL ADAPTER		7-16 DIN FEMALE TO 7-16 DIN FEMALE	S	S	T	
RFD-1658-2	14	RIGHT ANGLE ADAPTER		7-16 DIN FEMALE TO 7-16 DIN FEMALE	S	S	T	
RFD-1660-2	15	BARREL ADAPTER		7-16 DIN FEMALE TO 7-16 DIN MALE	S	S	T	

BNC — 50 Ohm

WIFI Find Reverse Polarity on page 51-56

MALE

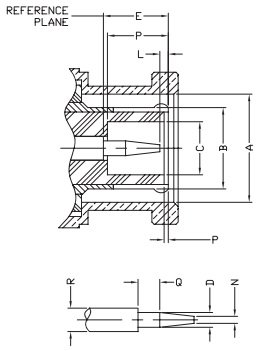

LETTER	INCHES [MILLIMITERS]	
	MINIMUM	MAXIMUM
A	.385 [9.78]	.390 [9.91]
B	FLARED TO MEET ELECTRICAL & MECHANICAL REQUIREMENTS	
C	.190 [4.83]	–
D	.052 [1.32]	.054 [1.37]
E	5.33 [.210]	.230 [5.84]
F	.006 [.15]	.018 [.46]
L	.003 [.08]	.040 [1.02]
N	–	.025 [.64]
P	.208 [5.28]	.228 [5.79]
Q	.078 [1.98]	–
R	.081 [2.06]	.087 [2.21]

FEMALE

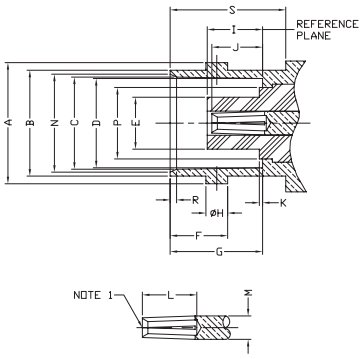

NOTE 1: I.D. TO MEET VSWR AND CONTACT RESISTANCE WHEN MATED WITH .052/.054 DIA. PIN

LETTER	INCHES [MILLIMITERS]	
	MINIMUM	MAXIMUM
A	.432 [10.97]	.436 [11.07]
B	.375 [9.60]	.382 [9.70]
C	.327 [8.31]	.333 [8.46]
D	.319 [8.10]	.321 [8.15]
E	–	.186 [4.72]
F	.204 [5.18]	.208 [5.28]
G	.327 [8.31]	.335 [8.51]
H	.075 [1.91]	.081 [2.06]
I	.188 [4.78]	.208 [5.28]
J	.186 [4.72]	.206 [5.23]
K	–	.006 [.15]
L	.195 [4.95]	–
M	.081 [2.06]	.087 [2.21]
N	.346 [8.79]	.356 [9.04]
P	–	.256 [6.50]
R	.015 [.38]	.030 [.76]
S	.414 [10.52]	–

SPECIFICATIONS

ELECTRICAL SPECIFICATIONS
IMPEDANCE: 50 Ω
WORKING VOLTAGE RATING: 500 VRMS @ SEA LEVEL
FREQUENCY RANGE: 0-4 GHz

MECHANICAL SPECIFICATIONS
MATING: 2-STUD BAYONET LOCK COUPLING
INTERFACE: MIL-STD-348, SECTION 301
CABLING: CLAMP, SOLDERLESS CLAMP, CRIMP AND TWIST ON

PLATING
G - GOLD
N - NICKEL
S - SILVER
SS - STAINLESS STEEL
TP - THERMOPLASTIC

DIELECTRIC MATERIAL
D - DELRIN
PP - POLYPROPYLENE
T - TEFLON
TP - THERMOPLASTIC

CABLE GROUPS

GRP	FOR THESE CABLE TYPES
B	RG-174, 188, 188A, 316/U; ALPHA 9174, 9316; BELDEN 8216, 83269, 83284, 84316; TIMES LMR-100A
B1	RG-316/U DOUBLE SHIELD
C	RG-58, 58A, 58C, 141, 141A; BELDEN 8219, 8240, 8259, 8262, 9201, 9203, 9310, 9311; COMMSCOPE BWC-195, BWC-195R, 0268; TIMES LMR-195
C1	RG-55, 55A, 55B, 142, 142A, 142B, 223, 400/U; ALPHA 9055, 9055B, 9223; BELDEN 83242, 84142
C2	ALPHA 9848; COMMSCOPE BWC-200, BWC-200R; TIMES LMR-200, MSI-22
E	RG-8, 8A, 213/U; ALPHA 9008, 9213; BELDEN 8267, 9251, 9880, 89880; INTERCOMP 4082, 22132; TIMES AA-4478
I	RG-8/U TYPE; BELDEN 9913; COMMSCOPE BWC-400, BWC-400R, CUSHCRAFT ULTRALINK TL93605; TIMES AA-5886, AA-6146, LMR-400, LMR-400 ULTRAFLEX; T-COM-400
M	RG-122/U; BELDEN 82907, 88240, 89907; MOTOROLA WHITE TEFLON; TIMES MSI-15
P	ANTENNA SPECIALIST K214, PRO-FLEX 800; TIMES AA-3096
PL	BELDEN 89913
X	RG-8X; BELDEN 9258; COMMSCOPE BWC-240, BWC-240R; MICRO 8/U; REMEE 1600; SAXTON 8315; TIMES LMR-240, LMR-240 ULTRAFLEX

FOR A MORE EXTENSIVE LISTING OF CABLE GROUPS, PLEASE REFER TO PAGES 131-139.

FIG. 1
RFB-1100-2, -2ST, -B, -C2ST, RFB-1101-1X

FIG. 2
RFB-1101-1EN, -1P, -1SI, -PL

FIG. 3
RFB-1102-T

FIG. 4
RFB-1104

FIG. 5
RFB-1106-2, - 2ST, -2T, -2TC1, -C-03, C1, -C1ST, -C2, -C2ST, -C2T, RFB-1107-1P, -1X, -7

FIG. 6
RFB-1106-5, -5B1

FIG. 7
RFB-1106-6

FIG. 8
RFB-1106-9

Strain reliefs for RG-58/U — available separately
PT-4015-03-BK (black), PT-4015-03-BL (blue)

FIG. 9
RFS-2022

FIG. 10
RFS-2023

FIG. 11
RFB-1106-B-ST, -B1

FIG. 12
RFB-1106-I

PHOTOS FOR REFERENCE ONLY, SHOWN AT 100% ACTUAL SIZE.

FOR MOUNTING CONFIGURATIONS REFER TO PAGES 137-151

PART #	FIG	DESCRIPTION	CBL GRP	NOTES	REPLACES OR EQUIVALENT TO	PLATING			RECOM-MENDED TOOL
						BDY	P/C	DIE	
RFB-1100-2	1	MALE CLAMP	C	FOR RG-58/U	UG-88D/U	N	G	D	RFA-4009-204
RFB-1100-2ST	1	MALE CLAMP	C, C1	FOR RG-58/U & RG-142/U	UG-88/U, C/U, D/U, E/U	S	G	T	RFA-4009-204
RFB-1100-B	1	MALE CLAMP	B	FOR RG-174/U		N	G	T	RFA-4009-204
RFB-1100-C2ST	1	MALE CLAMP	C2	FOR TIMES LMR-200		S	G	T	RFA-4009-204
RFB-1101-1EN	2	MALE CLAMP	E	FOR RG-8/U	UG-959A/U	N	G	T	RFA-4009-206
RFB-1101-1P	2	MALE CLAMP	P	FOR PROFLEX		N	G	T	RFA-4009-203
RFB-1101-1SI	2	MALE CLAMP	I	FOR BELDEN 9913 & TIMES LMR-400		S	G	T	RFA-4005-200
RFB-1101-1X	1	MALE CLAMP	X	FOR RG-8/X & TIMES LMR-240		N	G	D	
RFB-1101-PL	2	MALE CLAMP	PL	FOR BELDEN 89913 PLENUM		S	G	T	RFA-4005-200
RFB-1102-T	3	MALE SOLDERLESS CLAMP	C	FOR RG-58/U & RG-141/U		N	S	T	
RFB-1104	4	MALE TWIST-ON	C	FOR RG-58/U		N	S	D	
RFB-1106-2	5	MALE CRIMP	C	FOR RG-58/U	UG-1785/U	N	G	D	RFA-4009-206
RFB-1106-2ST	5	MALE CRIMP	C	FOR RG-58/U	UG-1785/U	S	G	T	RFA-4009-206
RFB-1106-2T	5	MALE CRIMP	C	FOR RG-58/U	UG-1785/U	N	G	T	RFA-4009-206
RFB-1106-2TC1	5	MALE CRIMP	C1	FOR RG-142/U		N	G	T	RFA-4009-206
RFB-1106-5	6	MALE CRIMP	B	LARGE FERRULE, FOR RG-174/U		N	G	T	RFA-4009-204
RFB-1106-5B1	6	MALE CRIMP	B1	LARGE FERRULE, FOR RG-316 DOUBLE SHIELD		N	G	T	RFA-4009-204
RFB-1106-6	7	MALE CRIMP	B	SMALL FERRULE, FOR RG-174/U		N	G	T	RFA-4009-204 RFA-4089
RFB-1106-9	8	MALE QUICK DISCONNECT CRIMP	C	UNIVERSAL FOR BNC, & TNC, FOR RG-58/U		N	G	D	RFA-4009-206
RFS-2022	9	BNC MALE QUICK-DISCONNECT CRIMP	C	FOR RG-58/U		N	G	T	RFA-4009-206
RFS-2023	10	BNC FEMALE QUICK-DISCONNECT CRIMP	C	FOR RG-58/U		N	G	T	RFA-4009-206
RFB-1106-B-ST	11	MALE CRIMP	B	FOR RG-174/U & RG-316/U		S	G	T	RFA-4009-204
RFB-1106-B1	11	MALE CRIMP	B1	FOR RD-174/U & RG-316/U		N	G	T	RFA-4009-204
RFB-1106-C-03	5	MALE CRIMP	C	FOR RG-58/U		N	G	D	RFA-4009-206
RFB-1106-C1	5	MALE CRIMP	C1	FOR RG-142/U		N	G	D	RFA-4009-206
RFB-1106-C1ST	5	MALE CRIMP	C1	FOR RG-142/U		S	G	T	RFA-4009-206
RFB-1106-C2	5	MALE CRIMP	C2	FOR TIMES LMR-200		N	G	T	RFA-4009-206
RFB-1106-C2ST	5	MALE CRIMP	C2	FOR TIMES LMR-200		S	G	T	RFA-4009-206
RFB-1106-C2T	5	MALE CRIMP	C2	FOR TIMES LMR-200		N	G	T	RFA-4009-206
RFB-1106-I	12	MALE CRIMP	I	FOR LMR-400/U		N	G	T	RFA-4005-300
RFB-1107-1P	5	MALE CRIMP	P	FOR PROFLEX		N	G	D	RFA-4009-203
RFB-1107-1X	5	MALE CRIMP	X	FOR RG-8/X & TIMES LMR-240		N	G	D	RFA-4009-203
RFB-1107-7	5	MALE CRIMP	C3, M	FOR MOTOROLA WHITE TEFLON, BELDEN 89907		S	G	T	RFA-4009-206

FIG. 13
RFB-1110-1, C1, C2

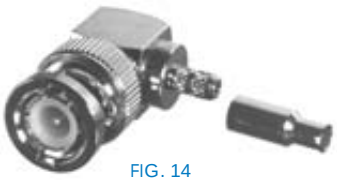
FIG. 14
RFB-1110-B

FIG. 15
RFB-1110-C-04

FIG. 16
RFB-1111

FIG. 17
RFB-1112-1B

FIG. 18
RFB-1112-1B-03

FIG. 19
RFB-1112-1W

FIG. 20
RFB-1112-B

FIG. 21
RFB-1112-B-03

FIG. 22
RFB-1112-W

FIG. 23
RFB-1112-W-03

FIG. 24
RFB-1113-1B

PHOTOS FOR REFERENCE ONLY, SHOWN AT 100% ACTUAL SIZE.

FOR MOUNTING CONFIGURATIONS REFER TO PAGES 137-151

PART #	FIG	DESCRIPTION	CBL GRP	NOTES	REPLACES OR EQUIVALENT TO	PLATING			RECOM-MENDED TOOL
						BDY	P/C	DIE	
RFB-1110-1	13	MALE RIGHT ANGLE	C	FOR RG-58/U		N	G	T	RFA-4009-206
RFB-1110-B	14	MALE RIGHT ANGLE	B	FOR RG-174A/U & RG-316/U		N	G	T	RFA-4009-204
RFB-1110-C-04	15	MALE RIGHT ANGLE CLAMP	C, C1	FOR RG-58/U & RG-142/U		S	G	T	
RFB-1110-C1	13	MALE RIGHT ANGLE CRIMP	C1	FOR RG-55/U & RG-142/U		N	G	T	RFA-4009-206
RFB-1110-C2	13	MALE RIGHT ANGLE CRIMP	C2	FOR TIMES LMR-200		N	G	T	RFA-4009-206
RFB-1111	16	FEMALE RIGHT ANGLE PCB MOUNT		WITH TRIPLE D-FLAT, DIECAST ZINC		N	G	PP	
RFB-1112-1B	17	FEMALE VERTICAL LO-PROFILE PCB MT		WITH D-FLAT & POST LEGS, BLACK		N/TP	G	PP	
RFB-1112-1B-03	18	FEMALE VERTICAL LO-PROFILE PCB MT		WITH D-FLAT & SNAP LEGS, BLACK		N/TP	G	PP	
RFB-1112-1W	19	FEMALE VERTICAL LO-PROFILE PCB MT		WITH D-FLAT & POST LEGS, WHITE		N/TP	G	PP	
RFB-1112-B	20	FEMALE R/A LO-PROFILE PCB MOUNT		WITH D-FLAT & POST LEGS, BLACK		N/TP	G	PP	
RFB-1112-B-03	21	FEMALE R/A LO-PROFILE PCB MOUNT		WITH D-FLAT & SNAP LEGS, BLACK		N/TP	G	PP	
RFB-1112-W	22	FEMALE R/A LO-PROFILE PCB MOUNT		WITH D-FLAT & POST LEGS, WHITE		N/TP	G	PP	
RFB-1112-W-03	23	FEMALE R/A LO-PROFILE PCB MOUNT		WITH D-FLAT & SNAP LEGS, WHITE		N/TP	G	PP	
RFB-1113-1B	24	FEMALE VERTICAL HI-PROFILE PCB MT		WITH D-FLAT & POST LEGS, BLACK		N/TP	G	PP	

FIG. 25
RFB-1113-1B-03

FIG. 26
RFB-1113-1W

FIG. 27
RFB-1113-1W-03

FIG. 28
RFB-1113-B

FIG. 29
RFB-1113-B-04

FIG. 30
RFB-1113-W

FIG. 31
RFB-1113-W-03

FIG. 32
RFB-1115, -S

FIG. 33
RFB-1115-3

FIG. 34
RFB-1115-4

FIG. 35
RFB-1115-6

FIG. 36
RFB-1115-14

PHOTOS FOR REFERENCE ONLY, SHOWN AT 100% ACTUAL SIZE.

FOR MOUNTING CONFIGURATIONS REFER TO PAGES 137-151

PART #	FIG	DESCRIPTION	CBL GRP	NOTES	REPLACES OR EQUIVALENT TO	PLATING			RECOM-MENDED TOOL
						BDY	P/C	DIE	
RFB-1113-1B-03	25	FEMALE VERTICAL HI-PROFILE PCB MT		WITH D-FLAT & SNAP LEGS, BLACK		N/TP	G	PP	
RFB-1113-1W	26	FEMALE VERTICAL HI-PROFILE PCB MT		WITH D-FLAT & POST LEGS, WHITE		N/TP	G	PP	
RFB-1113-1W-03	27	FEMALE VERTICAL HI-PROFILE PCB MT		WITH D-FLAT & SNAP LEGS, WHITE		N/TP	G	PP	
RFB-1113-B	28	FEMALE R/A HI-PROFILE PCB MOUNT		WITH D-FLAT & POST LEGS, BLACK		N/TP	G	PP	
RFB-1113-B-04	29	FEMALE R/A HI-PROFILE PCB MOUNT		WITH D-FLAT & POST LEGS, BLACK, NO HARDWARE		N/TP	G	PP	
RFB-1113-W	30	FEMALE R/A HI-PROFILE PCB MOUNT		WITH D-FLAT & POST LEGS, WHITE		N/TP	G	PP	
RFB-1113-W-03	31	FEMALE R/A HI-PROFILE PCB MOUNT		WITH D-FLAT & SNAP LEGS, WHITE		N/TP	G	PP	
RFB-1115	32	FEMALE PANEL MOUNT		4 HOLE FLANGE	UG-290A/U	N	G	T	
RFB-1115-3	33	FEMALE VERTICAL PCB MOUNT		3 LEG		N	G	T	
RFB-1115-4	34	FEMALE VERTICAL PCB MOUNT		4 LEG		S	G	T	
RFB-1115-6	35	FEMALE R/A PCB MOUNT		LONG, DIECAST ZINC		N	G	T	
RFB-1115-14	36	FEMALE FLANGE		4 HOLE FLANGE WITH HOLES .720" ON CENTER		S	G	T	

BNC CONNECTORS AND IN-SERIES ADAPTERS — continued

FIG. 37
RFB-1115-21

FIG. 38
RFB-1116, -3

FIG. 39
RFB-1116-11, -NG, -SG

FIG. 40
RFB-1116-B-03

FIG. 41
RFB-1116-I

FIG. 42
RFB-1116-I-03

FIG. 43
RFB-1116-NG-03

FIG. 44
RFB-1117, -C1,
C1T, -C2

PHOTOS FOR REFERENCE ONLY, SHOWN AT 100% ACTUAL SIZE.

FOR MOUNTING CONFIGURATIONS REFER TO PAGES 137-151

PART #	FIG	DESCRIPTION	CBL GRP	NOTES	REPLACES OR EQUIVALENT TO	PLATING			RECOM-MENDED TOOL
						BDY	P/C	DIE	
RFB-1115-21	37	FEMALE VERTICAL PCB MOUNT		.5" ON CENTER		N	S	T	
RFB-1115-S	32	FEMALE PANEL MOUNT		4 HOLE FLANGE	UG-290A/U	S	G	T	
RFB-1116	38	FEMALE BULKHEAD		FRONT MOUNT WITH D-FLAT, DIECAST ZINC	UG-1094A/U	N	G	D	
RFB-1116-3	38	FEMALE BULKHEAD		FRONT MNT W/ D-FLAT & LOCKWASHER (NO SOLDER LUG)		N	G	T	
RFB-1116-11	39	FEMALE BULKHEAD		FRONT MOUNT W/ BERILLIUM COPPER CONTACT		N	G	T	
RFB-1116-B-03	40	FEMALE BULKHEAD CRIMP	B	FRONT MOUNT FOR RG-174/U &RG-316/U		N	G	T	RFA-4005-100 & RFA-4005-05
RFB-1116-I	41	FEMALE BULKHEAD		FRONT MOUNT WITH D-FLAT, INSULATED		N	G	TP	
RFB-1116-I-03	42	FEMALE BULKHEAD		FRONT MOUNT WITH D-FLAT, INSULATED, WITH .500 MOUNTING THREADS, NO HARDWARE		N	G	TP	
RFB-1116-NG	39	FEMALE BULKHEAD		FRONT MOUNT WITH D-FLAT & SOLDER LUG	UG-1094A/U	N	G	T	
RFB-1116-NG-03	43	FEMALE BULKHEAD		SOLDER CUP W/O HARDWARE		N	G	T	
RFB-1116-SG	39	FEMALE BULKHEAD		FRONT MOUNT WITH D-FLAT	UG-1094A/U	S	G	T	
RFB-1117	44	FEMALE CRIMP BULKHEAD	C	REAR MOUNT WITH D-FLAT & O-RING FOR RG-58/U		N	G	D	RFA-4009-206

For more information or custom products call us or go to our website. See cover for contact information.

FIG. 45
RFB-1117-B1-T, -BT, -BT-03

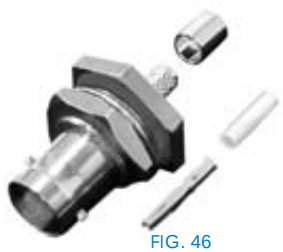

FIG. 46
RFB-1117-BT-04

FIG. 47
RFB-1121

FIG. 48
RFB-1123-1, -1-SS, -C1, -C2, RFB-1124-1P, -1X

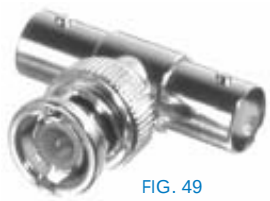

FIG. 49
RFB-1130, -1

FIG. 50
RFB-1130-2

FIG. 51
RFB-1130-3

FIG. 52
RFB-1130-5

PHOTOS FOR REFERENCE ONLY, SHOWN AT 100% ACTUAL SIZE.

FOR MOUNTING CONFIGURATIONS REFER TO PAGES 137-151

PART #	FIG	DESCRIPTION	CBL GRP	NOTES	REPLACES OR EQUIVALENT TO	PLATING			RECOM-MENDED TOOL
						BDY	P/C	DIE	
RFB-1117-B1-T	45	FEMALE CRIMP BULKHEAD	B1	REAR MOUNT WITH D-FLAT & O-RING FOR RG-316 DOUBLE SHIELD, MAX. PANEL THICKNESS .20"		N	G	T	RFA-4009-204
RFB-1117-BT	45	FEMALE CRIMP BULKHEAD	B	REAR MOUNT WITH D-FLAT & O-RING FOR RG-174/U, MAX. PANEL THICKNESS .200"		N	G	T	RFA-4009-204
RFB-1117-BT-03	45	FEMALE CRIMP BULKHEAD	B	REAR MOUNT WITH D-FLAT & O-RING FOR RG-174/U, MAX. PANEL THICKNESS .140"		N	G	T	RFA-4009-204
RFB-1117-BT-04	46	FEAMLE CRIMP BULKHEAD	B	SHORT FERRULE AND FERRULE STUD; FOR RG-174/U, RG-316/U		N	G	T	RFA-4009-204
RFB-1117-C1	44	FEMALE CRIMP BULKHEAD	C1	REAR MOUNT WITH D-FLAT & O-RING FOR RG-142/U		N	G	D	RFA-4009-206
RFB-1117-C1T	44	FEMALE CRIMP BULKHEAD	C1	REAR MOUNT WITH D-FLAT & O-RING FOR RG-142/U, MAX. PANEL THICKNESS .25"		N	G	T	RFA-4009-206
RFB-1117-C2	44	FEMALE CRIMP BULKHEAD	C2	REAR MOUNT WITH D-FLAT & O-RING FOR TIMES LMR-200		N	G	D	RFA-4009-206
RFB-1121	47	FEMALE TWIST-ON	C	FOR RG-58/U		N	S	D	
RFB-1123-1	48	FEMALE CRIMP	C	FOR RG-58/U		N	G	T	RFA-4009-206
RFB-1123-1-SS	48	FEMALE CRIMP	C	FOR RG-58/U		SS	G	T	RFA-4009-206
RFB-1123-C1	48	FEMALE CRIMP	C1	FOR RG-142/U		N	G	T	RFA-4009-206
RFB-1123-C2	48	FEMALE CRIMP	C2	FOR TIMES LMR-200		N	G	T	RFA-4009-206
RFB-1124-1P	48	FEMALE CRIMP	P	FOR PROFLEX		N	G	D	RFA-4009-203
RFB-1124-1X	48	FEMALE CRIMP	X	FOR RG-8X & TIMES LMR-240		N	G	D	RFA-4009-203
RFB-1130	49	T ADAPTER		BNC MALE TO DOUBLE BNC FEMALE	UG-274B/U, C/U	N	G	T	N/A
RFB-1130-1	49	T ADAPTER		BNC MALE TO DOUBLE BNC FEMALE, DIECAST	UG-274B/U, C/U	N	G	D	N/A
RFB-1130-2	50	T ADAPTER		BNC MALE TO DOUBLE BNC FEMALE, MOLDED PLASTIC JACKET	FOR LAN USE	N	G	D	
RFB-1130-3	51	F ADAPTER		BNC MALE TO DOUBLE BNC FEMALE	FOR LAN USE	N	G	D	
RFB-1130-5	52	GOALPOST ADAPTER		BNC MALE TO DOUBLE BNC FEMALE	FOR LAN USE	N	G	D	

BNC CONNECTORS AND IN-SERIES ADAPTERS — continued

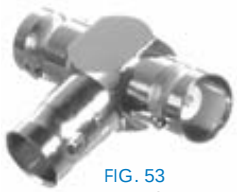
FIG. 53
RFB-1131

FIG. 54
RFB-1132

FIG. 55
RFB-1133

FIG. 56
RFB-1134

FIG. 57
RFB-1135, -I, -T

FIG. 58
RFB-1138

FIG. 59
RFB-1143, -03

FIG. 60
RFB-1145

FIG. 61
RFB-1150

FIG. 62
RFB-1150-1, -2-1W

FIG. 63
RFB-1154

FIG. 64
RFB-1160

PHOTOS FOR REFERENCE ONLY, SHOWN AT 100% ACTUAL SIZE.

FOR MOUNTING CONFIGURATIONS REFER TO PAGES 137-151

PART #	FIG	DESCRIPTION	CBL GRP	NOTES	REPLACES OR EQUIVALENT TO	PLATING			RECOM-MENDED TOOL
						BDY	P/C	DIE	
RFB-1131	53	T ADAPTER		TRIPLE BNC FEMALE		N	S	T	
RFB-1132	54	RIGHT ANGLE ADAPTER		BNC MALE TO BNC FEMALE	UG-306/U, A/U, B/U	N	S	T	
RFB-1133	55	BARREL ADAPTER		BNC MALE TO BNC MALE	UG-491/U, A/U, B/U	N	G	T	
RFB-1134	56	BARREL ADAPTER		BNC FEMALE TO BNC FEMALE	UG-914/U	N	G	PP	
RFB-1135	57	FEMALE BULKHEAD ADAPTER		DOUBLE BNC FEMALE WITH D-FLAT & O-RING	UG-492/U	N	G	D	
RFB-1135-I	57	FEMALE BULKHEAD ADAPTER		DOUBLE BNC FEMALE WITH D-FLAT, INSULATED		S	G	D	
RFB-1135-T	57	FEMALE BULKHEAD ADAPTER		DOUBLE BNC FEMALE WITH D-FLAT & O-RING	UG-492/U, D/U	N	G	T	
RFB-1138	58	ADAPTER		BNC FEM TO BNC MALE , CONNECTOR SAVER		N	G	D	
RFB-1143	59	MALE BULKHEAD		FRONT MOUNT, D-FLAT		N	G	T	
RFB-1143-03	59	MALE BULKHEAD		FRONT MOUNT WITHOUT SOLDER TAB, D-FLAT		N	G	T	
RFB-1145	60	BNC FEMALE TO 1/4 X 24 STUD		ADAPTER FOR KENWOOD PORTABLES TK240 & TK340		N	S	T	
RFB-1150	61	MALE TERMINATION		50 OHM,1/2 WATT, 1.5 GHZ		N	G	D	
RFB-1150-1	62	MALE TERMINATION WITH CHAIN		50 OHM, 1/2 WATT, 1.5 GHZ		N	G	D	
RFB-1150-2-1W	62	MALE TERMINATION WITH CHAIN		50 OHM, 1 WATT, 1.5 GHZ,		S	G	T	
RFB-1154	63	FEMALE RIGHT ANGLE BULKHEAD		FRONT MOUNT W/ SOLDER CUP, O-RING & D-FLAT		N	G	T	
RFB-1160	64	FEMALE CRIMP	C	WALL PLATE FLUSH REAR MOUNT W/ D-FLAT FOR RG-58/U (LAN)		N	G	D	RFA-4009-206

For more information or custom products call us or go to our website. See cover for contact information.

BNC — 75 Ohm

MALE

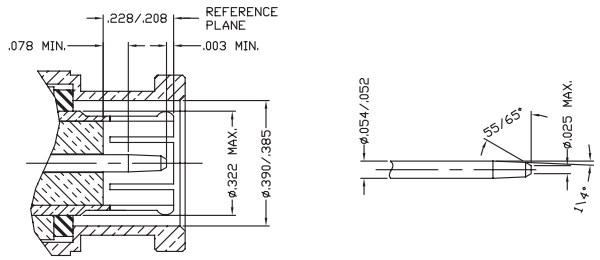

FEMALE

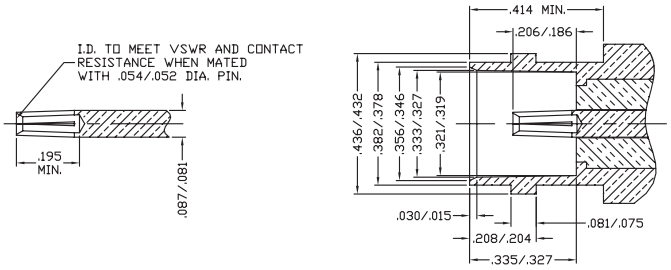

SPECIFICATIONS

ELECTRICAL SPECIFICATIONS
IMPEDANCE: 75 Ω
WORKING VOLTAGE RATING: 500 VRMS
FREQUENCY RANGE: 0-2 GHz

MECHANICAL SPECIFICATIONS
MATING: 2-STUD BAYONET LOCK COUPLING
INTERFACE: MIL-STD-348
CABLING: CLAMP, CRIMP, COMPRESSION AND TWIST-ON

PLATING
G - GOLD
N - NICKEL
S - SILVER
TP - THERMOPLASTIC

DIELECTRIC MATERIAL
D - DELRIN
P - POLYPROPYLENE
T - TEFLON
TP - THERMOPLASTIC

CABLE GROUPS

GRP	FOR THESE CABLE TYPES
D	RG-59, 59A, 59B, 62, 62A, 62C/U; ALPHA 9059, 9062, 9830, 9840, 9845; BELDEN 7807A, 8221, 8241, 9169, 9204, 9228; CANARE LV-61S; COMMSCOPE 5555, 5560, 5563; HARBOUR HPF200
D1	BELDEN 1426A, 1505A, 8212, 8241F, 9100, 9110, 9165, 9171, 9240, 9259, 9265, 9274, 9275, 9659, YR2393D; COMMSCOPE 5553, 5565, 5552, 5550, 5567, 5571
D2	BELDEN 8279, 8279A, 9209, 9209A, 82241, 88241; COMMSCOPE 2041K, 7573
D3	RG-59/U TYPE; BELDEN 1506A, 1825A, 1826A, 82108, 89108, 89259; COMMSCOPE 2045, 2045V, 2065V
G	ALPHA 9807, 9808, 9813; BELDEN 8281, 9141, 9231, 88281; COMMSCOPE 2527K, 7501, 7503, 7505, 7506; CANARE LV-775; WESTERN ELECTRIC WE724, WE728, WE729
J	BELDEN 1164A, 1164B, 1167B, 1263A, 1406B, 1407B, 1417B, 1818B, 1865A, 8218; COMMSCOPE 7537, 753603, 753604, 753605; RAYCHEM EPD 0810
K	COMMSCOPE 735, 73501, 73501P
Q	RG-6/U TYPE; BELDEN 1694A, 9248; COMMSCOPE 5715, 5729, 5765
Q1	RG-6/U TYPE PLENUM; BELDEN 1695A, 82120, 82248, 87120, 89120, 89248; COMMSCOPE 2278, 2278V, 2279, 2279K, 2279V
R	RG-11/U TYPE; BELDEN 8213, 8238, 8261, 9011, 9292; COMMSCOPE 3247, 5901, 5903, 5908, 5909, 5916, 5916R, 5918
S	RG-161, 179, 179A, 187, 187A/U; BELDEN 1520A, 1521A, 1522A, 9221; COMMSCOPE 15-55340

FOR A MORE EXTENSIVE LISTING OF CABLE GROUPS, PLEASE REFER TO PAGES 131-133.

COMPRESSION CONNECTOR
See compression tools on page 16.

FIG. 1
RFB-1701-D, G

FIG. 2
RFB-1704-D, -Q

FIG. 3
RFB-1705

FIG. 4
RFB-1706-9

PHOTOS FOR REFERENCE ONLY, SHOWN AT 100% ACTUAL SIZE.

FOR MOUNTING CONFIGURATIONS REFER TO PAGES 137-151

PART #	FIG	DESCRIPTION	CBL GRP	NOTES	REPLACES OR EQUIVALENT TO	PLATING			RECOM-MENDED TOOL
						BDY	P/C	DIE	
RFB-1701-D	1	MALE CLAMP	D	FOR RG-59/U	HUBER SUHNER 11 BNC-75-4-2	N	G	T	
RFB-1701-G	1	MALE CLAMP	G	BELDEN 8281		N	S	T	
RFB-1704-D	2	MALE COMPRESSION CRIMP	D	FOR RG-59/U	BLACK BAND	N	G	T	RFA-4004-20
RFB-1704-Q	2	MALE COMPRESSION CRIMP	Q	FOR RG-6/U	RED BAND	N	G	T	RFA-4004-20
RFB-1705	3	MALE TWIST-ON	D	FOR RG-59/U		N	S	D	
RFB-1706-9	4	MALE CRIMP	D	QUICK DISCONNECT FOR RG-59/U		N	G	D	RFA-4009-203

75-OHM BNC CONNECTORS AND IN-SERIES ADAPTERS — continued

FIG.5
RFB-1707-2, -D, -D2, -D3, -G, -J, -K, -Q, -Q1, -S, RFB-1708, -IT

FIG. 6
RFB-1707-R, R1

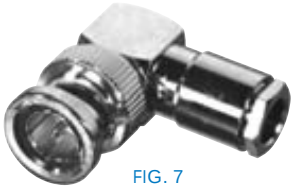

FIG. 7
RFB-1709-D

FIG.8
RFB-1710-D

FIG. 9
RFB-1710-K, -Q

FIG. 10
RFB-1710-S, -S1

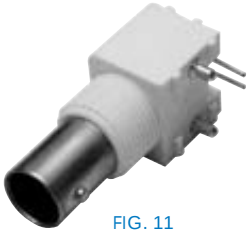

FIG. 11
RFB-1712-W

FIG. 12
RFB-1715-6

PHOTOS FOR REFERENCE ONLY, SHOWN AT 100% ACTUAL SIZE.

FOR MOUNTING CONFIGURATIONS REFER TO PAGES 137-151

PART #	FIG	DESCRIPTION	CBL GRP	NOTES	REPLACES OR EQUIVALENT TO	PLATING			RECOMMENDED TOOL
						BDY	P/C	DIE	
RFB-1707-2	5	MALE CRIMP	D	FOR RG-59/U	UG-1789/U	N	G	D	RFA-4009-203
RFB-1707-D	5	MALE CRIMP	D, D1	FOR RG-59/U	UG-1789/U, KINGS 2025-59-9	N	G	T	RFA-4009-203
RFB-1707-D2	5	MALE CRIMP	D2	FOR BELDEN 8279	KINGS 2025-38-9	N	G	T	RFA-4009-203
RFB-1707-D3	5	MALE CRIMP	D3	FOR RG-59/U TYPE	KINGS 2025-53-9	N	G	T	RFA-4009-203
RFB-1707-G	5	MALE CRIMP	G	FOR BELDEN 8281	KINGS 2025-55-9	N	G	T	RFA-4005-308
RFB-1707-J	5	MALE CRIMP	J	FOR BELDEN 8218	KINGS 2025-47-9	N	G	T	RFA-4005-307
RFB-1707-K	5	MALE CRIMP	K	FOR COMMSCOPE 735	KINGS 2025-44-9	N	G	T	RFA-4005-307
RFB-1707-Q	5	MALE CRIMP	Q	FOR RG-6/U	KINGS 2025-79-9	N	G	T	RFA-4005-308
RFB-1707-Q1	5	MALE CRIMP	Q1	FOR RG-6/U TYPE	KINGS 2025-89-9	N	G	T	RFA-4005-308
RFB-1707-R	6	MALE CRIMP	R	FOR RG-11/U	HUBER SUHNER 11 BNC-75-7-5	N	G	T	RFA-4009-205
RFB-1707-R1	6	MALE CRIMP	R1	FOR RG-11/U TYPE	18 AWG CENTER COND. CABLE	N	G	T	RFA-4009-205
RFB-1707-S	5	MALE CRIMP	S	FOR RG-179/U	KINGS 2025-57-9	N	G	T	RFA-4005-307
RFB-1708	5	MALE CRIMP	G	FOR BELDEN 8281	KINGS 2025-58-9	N	G	D	RFA-4005-308
RFB-1708-1T	5	MALE CRIMP	G	FOR BELDEN 8281	KINGS 2025-58-9	S	G	T	RFA-4005-308
RFB-1709-D	7	MALE RIGHT ANGLE CLAMP	D	FOR RG-59/U	HUBER SUHNER 16 BNC-75-4-2	N	G	T	
RFB-1710-D	8	MALE RIGHT ANGLE CRIMP	D	FOR RG-59/U	AMPHENOL 31-71010	N	G	T	RFA-4009-203
RFB-1710-K	9	MALE RIGHT ANGLE CRIMP	K	FOR COMMSCOPE 735	KINGS 2026-17-9	N	G	T	RFA-4005-305
RFB-1710-Q	9	MALE RIGHT ANGLE CRIMP	Q	FOR RG-6/U		N	G	T	RFA-4005-308
RFB-1710-S	10	MALE RIGHT ANGLE CRIMP	S	FOR RG-179/U	HUBER SUHNER 16 BNC-75-2-3	N	G	T	RFA-4005-307
RFB-1710-S1	10	MALE RIGHT ANGLE CRIMP	S	FOR RG-179/U DOUBLE SHIELD		N	G	T	RFA-4005-307
RFB-1712-W	11	FEMALE R/A LO-PROFILE PCB MOUNT		WITH POST LEGS, WHITE	Amphenol 31-71052	N/TP	G	PP	
RFB-1715-6	12	FEMALE RIGHT ANGLE PCB MOUNT		HIGH FREQ., LONG BODY, DIECAST ZINC		N	G	T	

For more information or custom products call us or go to our website. See cover for contact information.

FIG. 13
RFB-1715-11

FIG. 14
RFB-1716

FIG. 15
RFB-1716-1

FIG. 16
RFB-1717, -Q, -S

FIG. 17
RFB-1720

FIG. 18
RFB-1722

FIG. 19
RFB-1724, -K, -Q, -S

FIG. 20
RFB-1730

FIG. 21
RFB-1730-3, -4

FIG. 22
RFB-1732

FIG. 23
RFB-1733

FIG. 24
RFB-1734, -2

PHOTOS FOR REFERENCE ONLY, SHOWN AT 100% ACTUAL SIZE.

FOR MOUNTING CONFIGURATIONS REFER TO PAGES 137-151

PART #	FIG	DESCRIPTION	CBL GRP	NOTES	REPLACES OR EQUIVALENT TO	PLATING			RECOMMENDED TOOL
						BDY	P/C	DIE	
RFB-1715-11	13	FEMALE VERTICAL PCB MOUNT		4 LEGS ON .400" CENTERS	HUBER SUHNER 82 BNC-75-0-2	N	G	T	
RFB-1716	14	FEMALE BULKHEAD		FRONT MOUNT WITH D-FLAT, DIECAST ZINC	AMPHENOL 31-71004	N	G	D	
RFB-1716-I	15	FEMALE BULKHEAD		FRONT MOUNT WITH D-FLAT, INSULATED	AMPHENOL 31-10-75	N	G	TP	
RFB-1717	16	FEMALE CRIMP BULKHEAD	D	REAR MOUNT WITH D-FLAT & O-RING, FOR RG-59/U	AMPHENOL 31-71011-RFX	N	G	D	RFA-4009-203
RFB-1717-Q	16	FEMALE CRIMP BULKHEAD	Q	REAR MOUNT WITH D-FLAT & O-RING, FOR RG-6/U	KINGS 2022-29-9	N	G	T	RFA-4005-308
RFB-1717-S	16	FEMALE CRIMP BULKHEAD	S	REAR MOUNT WITH D-FLAT & O-RING, SOLDER ONLY PIN, FOR RG-179/U	AMPHENOL 31-70016	N	G	T	RFA-4009-204
RFB-1720	17	FEMALE CLAMP	D	FOR RG-59/U	UG-261C/U	N	S	T	
RFB-1722	18	FEMALE TWIST-ON	D	FOR RG-59/U		N	S	D	
RFB-1724	19	FEMALE CRIMP	D	FOR RG-59/U		N	G	D	RFA-4009-203
RFB-1724-K	19	FEMALE CRIMP	K	FOR COMMSCOPE 735		N	G	T	RFA-4005-307
RFB-1724-Q	19	FEMALE CRIMP	Q	FOR RG-6/U		N	G	T	RFA-4005-308
RFB-1724-S	19	FEMALE CRIMP	S	FOR RG-179/U	AMPHENOL 31-71014-RFX	N	G	T	RFA-4009-204
RFB-1730	20	T ADAPTER		BNC MALE TO DOUBLE BNC FEMALE	AMPHENOL 31-70036	N	G	T	
RFB-1730-3	21	F ADAPTER		BNC MALE TO DOUBLE BNC FEMALE		N	G	T	
RFB-1730-4	21	F ADAPTER		BNC MALE TO DOUBLE BNC FEMALE W/ INTERNAL 75 OHM RESISTORS (VIDEO SPLITTER)		N	G	D	
RFB-1732	22	RIGHT ANGLE ADAPTER		BNC MALE TO BNC FEMALE	AMPHENOL 31-9-75	N	G	T	
RFB-1733	23	BARREL ADAPTER		BNC MALE TO BNC MALE	AMPHENOL 31-218-75	N	G	T	
RFB-1734	24	BARREL ADAPTER		BNC FEMALE TO BNC FEMALE	AMPHENOL 31-219-75	N	G	T	
RFB-1734-2	24	BARREL ADAPTER		BNC FEMALE TO BNC FEMALE		S	G	T	

FIG. 25
RFB-1735, -I

FIG. 26
RFB-1745

FIG. 27
RFB-1750

FIG. 28
RFB-1760

PHOTOS FOR REFERENCE ONLY, SHOWN AT 100% ACTUAL SIZE.

FOR MOUNTING CONFIGURATIONS REFER TO PAGES 137-151

PART #	FIG	DESCRIPTION	CBL GRP	NOTES	REPLACES OR EQUIVALENT TO	PLATING			RECOMMENDED TOOL
						BDY	P/C	DIE	
RFB-1735	25	FEMALE BULKHEAD ADAPTER		DOUBLE BNC FEMALE WITH D-FLAT & O-RING	AMPHENOL 31-70020	N	G	T	
RFB-1735-I	25	FEMALE BULKHEAD ADAPTER		DOUBLE BNC FEMALE WITH D-FLAT, ISOLATED	AMPHENOL 31-4803-75	N	G	T	
RFB-1745	26	STRAIGHT ADAPTER		BNC FEMALE TO 1/4X24 STUD, FOR KENWOOD TK240, TK340	MIDLAND 70-1034	N	S	T	
RFB-1750	27	MALE TERMINATION		75 OHM 1/2 WATT		N	G	D	
RFB-1760	28	FEMALE CRIMP	D	WALLPLATE FLUSH MOUNT FOR RG-59/U		N	G	D	RFA-4009-203

TOOLS FOR COMPRESSION CONNECTORS

See compression connectors on page 13 and following page.

2-Blade Coaxial Stripper

for compression connectors only

RFA-4004-30

Compression Crimp Handle, 3-in-One Tool

for compression connectors only

RFA-4004-20

CONNECTOR MATING TIPS

- Before joining connectors, inspect mating surfaces for dirt, dust, debris and bent or broken contacts.
- When mating connectors, always turn the coupling nut rather than the body.
- In general, the tighter you make the coupling mechanism, the better the performance. However, many connectors are destroyed by over-torquing the coupling nut. Paired connectors tend to be inductive due to gaps of various types.
- Use a torque wrench for mating threaded adapters or cable assembly terminations when the reciprocal connector is mounted to equipment. Over torquing of plugs can damage the instrument mounted jack and the adapter or cable connector. This will also void most equipment warranties.

SPECIFICATIONS		CABLE GROUPS
	GRP	**FOR THESE CABLE TYPES**
ELECTRICAL SPECIFICATIONS IMPEDANCE: 75 Ω WORKING VOLTAGE RATING: 500 VRMS FREQUENCY RANGE: 0-1 GHz	D	RG-59, 59A, 59B, 62, 62A, 62C/U; ALPHA 9059, 9062, 9830, 9840, 9845; BELDEN 7807A, 8221, 8241, 9169, 9204, 9228; CANARE LV-61S; COMMSCOPE 5555, 5560, 5563; HARBOUR HPF200
	Q	RG-6/U TYPE; BELDEN 1694A, 9248; COMMSCOPE 5715, 5729, 5765
MECHANICAL SPECIFICATIONS MATING: 3/8 - 32 THREAD CABLING: CRIMP		
PLATING G - GOLD N - NICKEL T - TIN		
DIELECTRIC MATERIAL PE - POLYETHYLENE PP - POLYPROPYLENE		**FOR A MORE EXTENSIVE LISTING OF CABLE GROUPS, PLEAS PAGES 131-133**

COMPRESSION CONNECTOR
See compression tools on previous page.

FIG. 1
RFF-1401-D, -Q, -Q3

FIG. 2
RFF-1402-08

FIG. 3
RFF-1402-D

FIG. 4
RFF-1442, -03, -1

FIG. 5
RFF-1444

FIG. 6
RFF-1445-5, -5-1

FIG. 7
RFF-1446-10

FIG. 8
RFF-1448

FIG. 9
RFF-1450-03

FIG. 10
RFF-1476, -1

FIG. 11
RFF-1477

PHOTOS FOR REFERENCE ONLY, SHOWN AT 100% ACTUAL SIZE.

FOR MOUNTING CONFIGURATIONS REFER TO PAGES 137-151

PART #	FIG	DESCRIPTION	CBL GRP	NOTES	PLATING			RECOMMENDED TOOL
					BDY	P/C	DIE	
RFF-1401-D	1	MALE COMPRESSION CRIMP PLUG		BLACK BAND, FOR RG-59/U	N	T	PE	RFA-4004-20
RFF-1401-Q	1	MALE COMPRESSION CRIMP PLUG		RED BAND, FOR RG-6/U	N	T	PE	RFA-4004-20
RFF-1401-Q3	1	MALE COMPRESSION CRIMP PLUG		BLUE BAND, FOR RG-6/U QUAD	N	T	PE	RFA-4004-20
RFF-1402-08	2	MALE CRIMP	Q	NO PIN, WITH GASKET & SILICON, FOR RG-6/U	--	--	PE	RFA-4005-306
RFF-1402-D	3	MALE CRIMP	D	FOR RG-59/U	N	N	PE	RFA-4005-306
RFF-1442	4	FEMALE RIGHT ANGLE PCB MOUNT		4 LEG, LONG	N	T	PE	
RFF-1442-03	4	FEMALE RIGHT ANGLE PCB MOUNT		4 LEG, LONG	N	T	PP	
RFF-1442-1	4	FEMALE RIGHT ANGLE PCB MOUNT		4 LEG, SHORT	N	T	PP	
RFF-1444	5	FEMALE BULKHEAD		WITH HEX FLANGE & SOLDER TAB	N	T	PP	
RFF-1445-5	6	ADAPTER		F MALE QUICK DISCONNECT TO F FEMALE	N	T	PE	
RFF-1445-5-1	6	ADAPTER		F MALE QUICK DISCONNECT TO F FEMALE	G	G	PE	
RFF-1446-10	7	RIGHT ANGLE ADAPTER		F MALE TO F FEMALE	N	N	PE	
RFF-1448	8	ADAPTER		F MALE TO F MALE	N	N	PE	
RFF-1450-03	9	FEMALE VERTICAL PCB MOUNT		4 LEG, .32" ON CENTER, TAB CONTACT	N	T	PE	
RFF-1476	10	ADAPTER		F FEMALE TO F FEMALE	N	T	PE	
RFF-1476-1	10	ADAPTER		F FEMALE TO F FEMALE	G	T	PE	
RFF-1477	11	BULKHEAD ADAPTER		F FEMALE TO F FEMALE	N	T	PE	

MALE

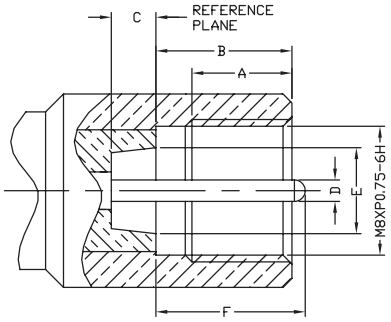

LETTER	INCHES [MILLIMITERS]	
	MINIMUM	MAXIMUM
A	.220 [5.59]	–
B	.298 [7.57]	.300 [7.62]
C	.098 [2.49]	–
D	.046 [1.17]	.048 [1.23]
E	.189 [4.80]	–
F	–	.315 [8.00]

FEMALE

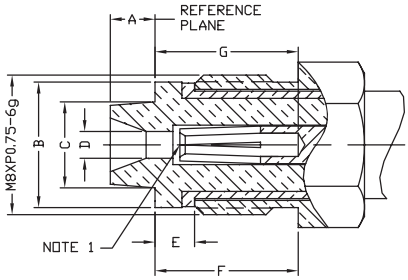

LETTER	INCHES [MILLIMITERS]	
	MINIMUM	MAXIMUM
A	–	.098 [2.50]
B	–	.276 [7.00]
C	–	.189 [4.80]
D	.051 [1.30]	–
E	.087 [2.20]	–
F	.315 [8.00]	–
G	.315 [8.00]	–

NOTE 1: I.D. TO MEET VSWR AND CONTACT RESISTANCE REQUIREMENTS

SPECIFICATIONS

ELECTRICAL SPECIFICATIONS
IMPEDANCE: 50 Ω
WORKING VOLTAGE RATING: 335 VRMS @SEA LEVEL (DEPENDENT ON CABLE)
FREQUENCY RANGE: 0-2 GHz

MECHANICAL SPECIFICATIONS
MATING: M8XP .75 THREAD

PLATING
G - GOLD
N - NICKEL

DIELECTRIC MATERIAL
D - DELRIN
T - TEFLON

CABLE GROUPS

GRP	FOR THESE CABLE TYPES
B	TIMES LMR-100A; RG-174, 188, 188A, 316/U; ALPHA 9174, 9316; BELDEN 7805A, 8216, 83269, 83284, 84316; COMMSCOPE AMC-174
C	TIMES LMR-195; RG-58, 58A, 58C, 141, 141A/U; ANDREW CNT-195, CNT-195-DB, CNT-195-FR; BELDEN 8219, 8240, 8259, 8262, 9201, 9203, 9310, 9311; COMMSCOPE WBC-195, WBC-195R, 0268, TCOM-195, TCOM-195-FR; HARBOUR HPF195
C1	RG-55, 55A, 55B, 142, 142A, 142B, 223, 400/U; ALPHA 9055, 9055B, 9223; BELDEN 7806A, 83242, 84142
C2	TIMES LMR-200, MSI-22; ALPHA 9848; BELDEN 7807A; COMMSCOPE AMC-58, WBC-200, WBC-200R, TCOM-200, TCOM-200-FR; HARBOUR HPF200
X	TIMES LMR-240, LMR-240 ULTRAFLEX; RG-8X; ANDREW CNT-240, CNT-240AL, CNT-240ALS, CNT-240-DB, CNT-240-FR, CNT-240-W; BELDEN 9258; COMMSCOPE TCOM-240, TCOM-240-FR, WBC-240, WBC-240R; HARBOUR HPF240; MICRO 8/U; REMEE 1600; SAXTON 8315

FOR A MORE EXTENSIVE LISTING OF CABLE GROUPS, PLEASE REFER TO PAGES 131-133.

FIG. 1
RFE-6000-B

FIG. 2
RFE-6000-C

FIG. 3
RFE-6050-C,
-C1, -C2, -X

FIG. 4
RFE-6100

PHOTOS FOR REFERENCE ONLY, SHOWN AT 100% ACTUAL SIZE.

FOR MOUNTING CONFIGURATIONS REFER TO PAGES 137-151

PART #	FIG	DESCRIPTION	CBL GRP	NOTES	PLATING			RECOMMENDED TOOL
					BDY	P/C	DIE	
RFE-6000-B	1	MALE CRIMP	B	FOR RG-174/U	N	G	T	RFA-4009-204
RFE-6000-C	2	MALE CRIMP	C	FOR RG-58/U	N	G	T	RFA-4009-206
RFE-6050-C	3	FEMALE CRIMP	C	FOR RG-58/U	N	G	D	RFA-4009-206
RFE-6050-C1	3	FEMALE CRIMP	C1	FOR RG-142/U	N	G	T	RFA-4009-206
RFE-6050-C2	3	FEMALE CRIMP	C2	FOR TIMES LMR-200	N	G	T	RFA-4009-206
RFE-6050-X	3	FEMALE CRIMP	X	FOR RG-8/X & TIMES LMR-240	N	G	T	RFA-4009-203
RFE-6100	4	ADAPTER		FME MALE TO FME MALE	N	G	T	

For more information or custom products call us or go to our website. See cover for contact information.

MMCX

WIFI Find Reverse Polarity on page 51-56

MMCX

PLUG

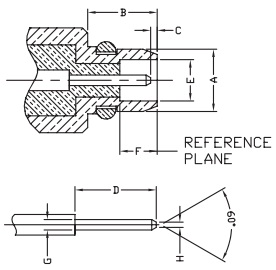

LETTER	INCHES [MILLIMITERS]	
	MINIMUM	MAXIMUM
A	–	.095 [2.40]
B	.106 [2.70]	–
C	.000	.010 [0.25]
D	–	.124 [3.15]
E	.062 [1.58]	.064 [1.62]
F	.057 [1.45]	–
G	.150 [0.38]	.017 [0.42]
H	–	.008 [0.20]

JACK

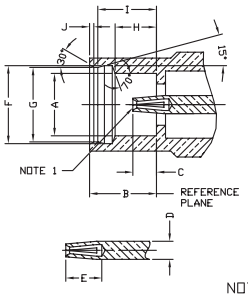

LETTER	INCHES [MILLIMITERS]	
	MINIMUM	MAXIMUM
A	.095 [2.41]	–
B	.102 [2.60]	–
C	.035 [0.90]	.047 [1.20]
D	.027 [0.68]	.028 [0.72]
E	.055 [1.40]	–
F	.118 [3.00]	.120 [3.04]
G	.113 [2.87]	.114 [2.90]
H	.062 [1.57]	.064 [1.63]
I	.091 [2.30]	.092 [2.34]
J	–	.009 [0.23]

NOTE 1: I.D. TO MEET VSWR AND CONTACT RESISTANCE WHEN MATED WITH .015/.017 DIA. PIN

SPECIFICATIONS

ELECTRICAL SPECIFICATIONS
IMPEDANCE: 50 Ω
WORKING VOLTAGE RATING: 170 VRMS
FREQUENCY RANGE: 0-6 GHz

MECHANICAL SPECIFICATIONS
MATING: SNAP ON COUPLING
INTERFACE: CECC 22000
CABLING: CRIMP AND PCB SOLDERING

PLATING
G - GOLD

DIELECTRIC MATERIAL
T - TEFLON

CABLE GROUPS

GRP	FOR THESE CABLE TYPES
A	RG-178, 178A, 178B, 196, 196A/U; BELDEN 83265
B	TIMES LMR-100A; RG-174, 188, 188A, 316/U; ALPHA 9174, 9316; BELDEN 7805A, 8216, 83269, 83284, 84316; COMMSCOPE AMC-174
B1	RG-316/U DOUBLE SHIELD; RD-316

FOR A MORE EXTENSIVE LISTING OF CABLE GROUPS, PLEASE REFER TO PAGES 131-139.

FIG. 1
RMX-9000-1A, -1B, -1B1

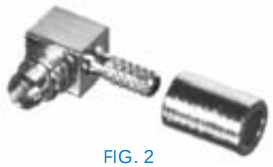

FIG. 2
RMX-9010-1A, -1B, -1B1

FIG. 3
RMX-9050-1B, 1B1

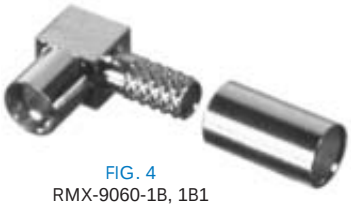

FIG. 4
RMX-9060-1B, 1B1

FIG. 5
RMX-9350-1

PHOTOS FOR REFERENCE ONLY, SHOWN AT 250% ACTUAL SIZE.

FOR MOUNTING CONFIGURATIONS REFER TO PAGES 140-157

PART #	FIG	DESCRIPTION	CBL GRP	NOTES	PLATING			RECOM-MENDED TOOL
					BDY	P/C	DIE	
RMX-9000-1A	1	CRIMP PLUG	A	FOR RG-178/U	G	G	T	RFA-4009-204
RMX-9000-1B	1	CRIMP PLUG	B	FOR RG-174/U	G	G	T	RFA-4009-204
RMX-9000-1B1	1	CRIMP PLUG	B1	FOR RG-316/U DOUBLE SHIELD	G	G	T	RFA-4009-204
RMX-9010-1A	2	RIGHT ANGLE CRIMP PLUG	A	FOR RG-178/U	G	G	T	RFA-4009-204
RMX-9010-1B	2	RIGHT ANGLE CRIMP PLUG	B	FOR RG-174/U	G	G	T	RFA-4009-204
RMX-9010-1B1	2	RIGHT ANGLE CRIMP PLUG	B1	FOR RG-316/U DOUBLE SHIELD	G	G	T	RFA-4009-204
RMX-9050-1B	3	CRIMP JACK	B	FOR RG-174/U	G	G	T	RFA-4009-204
RMX-9050-1B1	3	CRIMP JACK	B1	FOR RG-316/U DOUBLE SHIELD	G	G	T	RFA-4009-204
RMX-9060-1B	4	RIGHT ANGLE CRIMP JACK	B	FOR RG-174/U	G	G	T	RFA-4009-204
RMX-9060-1B1	4	RIGHT ANGLE CRIMP JACK	B1	FOR RG-316/U DOUBLE SHIELD	G	G	T	RFA-4009-204
RMX-9350-1	5	VERTICAL PCB JACK			G	G	T	

For more information or custom products call us or go to our website. See cover for contact information.

PLUG

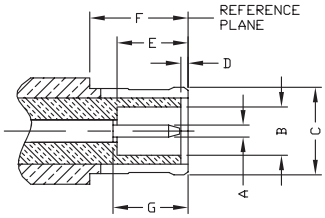

LETTER	INCHES [MILLIMITERS]	
	MINIMUM	MAXIMUM
A	.019 [0.48]	.021 [0.53]
B	.079 [2.00]	.082 [2.07]
C	.144 [3.66]	.148 [3.76]
D	.000	.012 [0.30]
E	.111 [2.81]	.126 [3.20]
F	.164 [4.16]	–
G	.111 [2.81]	.126 [3.20]

JACK

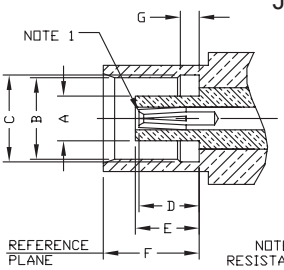

LETTER	INCHES [MILLIMITERS]	
	MINIMUM	MAXIMUM
A	.071 [1.80]	.078 [1.97]
B	.135 [3.43]	.137 [3.48]
C	.142 [3.61]	.148 [3.75]
D	.091 [2.31]	.110 [2.79]
E	.103 [2.61]	.110 [2.79]
F	.158 [4.00]	.162 [4.12]
G	.030 [0.75]	.033 [0.85]

NOTE 1: I.D. TO MEET VSWR AND CONTACT RESISTANCE WHEN MATED WITH .019/.021 DIA. PIN

SPECIFICATIONS

ELECTRICAL SPECIFICATIONS
IMPEDANCE: 50 Ω
WORKING VOLTAGE RATING: 335 VRMS
FREQUENCY RANGE: 0-6 GHz

MECHANICAL SPECIFICATIONS
MATING: SNAP ON COUPLING
INTERFACE: CECC 22220
CABLING: CRIMP

PLATING
N - NICKEL
G - GOLD

DIELECTRIC MATERIAL
T - TEFLON

CABLE GROUPS

GRP	FOR THESE CABLE TYPES
B	TIMES LMR-100A; RG-174, 188, 188A, 316/U; ALPHA 9174, 9316; BELDEN 7805A, 8216, 83269, 83284, 84316; COMMSCOPE AMC-174
B1	RG-316/U DOUBLE SHIELD; RD-316
C	TIMES LMR-195; RG-58, 58A, 58C, 141, 141A/U; ANDREW CNT-195, CNT-195-DB, CNT-195-FR; BELDEN 8219, 8240, 8259, 8262, 9201, 9203, 9310, 9311; COMMSCOPE WBC-195, WBC-195R, 0268, TCOM-195, TCOM-195-FR; HARBOUR HPF195

FOR A MORE EXTENSIVE LISTING OF CABLE GROUPS, PLEASE REFER TO PAGES 131-133.

FIG. 1
RMX-8000-1B, -1C, -B, -B1

FIG. 2
RMX-8000-1B-LCK

FIG. 3
RMX-8010-1B, -1B1, -1C, -B, -B1

FIG. 4
RMX-8010-1B-LCK

FIG. 5
RMX-8100-B

FIG. 6
RMX-8252-1B

FIG. 7
RMX-8300, -1

FIG. 8
RMX-8350, -1

FIG. 9
RMX-8400-1

PHOTOS FOR REFERENCE ONLY, SHOWN AT 150% ACTUAL SIZE.

FOR MOUNTING CONFIGURATIONS REFER TO PAGES 137-151

PART #	FIG	DESCRIPTION	CBL GRP	NOTES	PLATING			RECOMMENDED TOOL
					BDY	P/C	DIE	
RMX-8000-1B	1	CRIMP PLUG	B	FOR RG-174/U	G	G	T	RFA-4009-204
RMX-8000-1B-LCK	2	CRIMP PLUG	B	FOR RG-174/U	G	G	T	RFA-4009-204
RMX-8000-1C	1	CRIMP PLUG	C	FOR RG-58/U	G	G	T	RFA-4009-206
RMX-8000-B	1	CRIMP PLUG	B	FOR RG-174/U	N	G	T	RFA-4009-204
RMX-8000-B1	1	CRIMP PLUG	B1	FOR RG-316/U DOUBLE SHIELD	N	G	T	RFA-4009-204
RMX-8010-1B	3	RIGHT ANGLE CRIMP PLUG	B	FOR RG-174/U	G	G	T	RFA-4009-204
RMX-8010-1B-LCK	4	RIGHT ANGLE CRIMP PLUG	B	FOR RG-174/U	G	G	T	RFA-4009-204
RMX-8010-1B1	3	RIGHT ANGLE CRIMP PLUG	B1	FOR RG-316/U DOUBLE SHIELD	G	G	T	RFA-4009-204
RMX-8010-1C	3	RIGHT ANGLE CRIMP PLUG	C	FOR RG-58/U	G	G	T	RFA-4009-206
RMX-8010-B	3	RIGHT ANGLE CRIMP PLUG	B	FOR RG-174/U	N	G	T	RFA-4009-204
RMX-8010-B1	3	RIGHT ANGLE CRIMP PLUG	B1	FOR RG-316/U DOUBLE SHIELD	N	G	T	RFA-4009-204
RMX-8100-B	5	CRIMP JACK	B	FOR RG-174/U	N	G	T	RFA-4009-204
RMX-8252-1B	6	BULKHEAD CRIMP JACK	B	FOR RG-174/U	G	G	T	RFA-4009-204
RMX-8300	7	RIGHT ANGLE JACK PCB MOUNT			N	G	T	
RMX-8300-1	7	RIGHT ANGLE JACK PCB MOUNT			G	G	T	
RMX-8350	8	VERTICAL JACK PCB MOUNT			N	G	T	
RMX-8350-1	8	VERTICAL JACK PCB MOUNT			G	G	T	
RMX-8400-1	9	RIGHT ANGLE PCB MOUNT			G	G	T	

SPECIFICATIONS

ELECTRICAL SPECIFICATIONS
IMPEDANCE: NON-CONSTANT
WORKING VOLTAGE RATING: 1,600 VRMS (MATED PAIR)
FREQUENCY RANGE: N/A

MECHANICAL SPECIFICATIONS
MATING: 2-STUD BAYONET COUPLING
INTERFACE: MIL-STD-348, SECTION 303
CABLING: CLAMP, CRIMP AND SOLDER

PLATING
G - GOLD
N - NICKEL

DIELECTRIC MATERIAL
T - TEFLON

CABLE GROUPS

GRP	FOR THESE CABLE TYPES
D	RG-59, 59A, 59B, 62, 62A, 62C/U; ALPHA 9059, 9062, 9830, 9840, 9845; BELDEN 7807A, 8221, 8241, 9169, 9204, 9228; CANARE LV-61S; COMMSCOPE 5555, 5560, 5563; HARBOUR HPF200
E	TIMES AA-4478; RG-8, 8A, 213/U; ALPHA 9008, 9213; BELDEN 8267, 9251, 9880, 89880; INTERCOMP 4082, 22132
X	TIMES LMR-240, LMR-240 ULTRAFLEX; RG-8X; ANDREW CNT-240, CNT-240AL, CNT-240ALS, CNT-240-DB, CNT-240-FR, CNT-240-W; BELDEN 9258; COMMSCOPE TCOM-240, TCOM-240-FR, WBC-240, WBC-240R; HARBOUR HPF240; MICRO 8/U; REMEE 1600; SAXTON 8315

FOR A MORE EXTENSIVE LISTING OF CABLE GROUPS, PLEASE REFER TO PAGES 131-133.

FIG. 1
RHV-100-D

FIG. 2
RHV-100-E, -X

FIG. 3
RHV-106-D

FIG. 4
RHV-116

FIG. 5
RHV-124-D

FIG. 6
RHV-130

FIG. 7
RHV-134

PHOTOS FOR REFERENCE ONLY, SHOWN AT 100% ACTUAL SIZE.

FOR MOUNTING CONFIGURATIONS REFER TO PAGES 137-151

PART #	FIG	DESCRIPTION	CBL GRP	NOTES	PLATING			RECOM-MENDED TOOL
					BDY	P/C	DIE	
RHV-100-D	1	MALE CLAMP	D	FOR RG-59/U	N	G	T	RFA-4009-206
RHV-100-E	2	MALE CLAMP	E	FOR RG-213/U	N	G	T	RFA-4009-205
RHV-106-D	3	MALE CRIMP	D	FOR RG-59/U (22-23 AWG ONLY)	N	G	T	RFA-4009-203
RHV-106-X	2	MALE CRIMP	X	FOR LMR-240	N	G	T	RFA-4009-203
RHV-116	4	FEMALE BULKHEAD		FRONT MOUNT WITH D FLAT AND O RING	N	G	T	
RHV-124-D	5	FEMALE CLAMP	D	FOR RG-59/U	N	G	T	RFA-4009-206
RHV-130	6	FEMALE, MALE, FEMALE, "T" ADAPTER			N	G	T	
RHV-134	7	MHV FEMALE TO MHV FEMALE ADAPTER			N	G	T	

WIFI Find Reverse Polarity on page 51-56

N

MALE

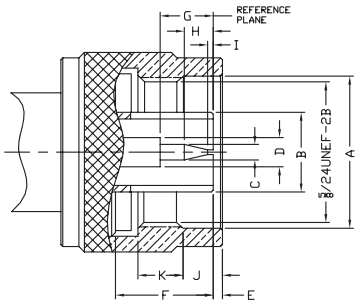

LETTER	INCHES [MILLIMETERS]	
	MINIMUM	MAXIMUM
A	.630 [16.00]	–
B	–	.330 [8.38]
C	.063 [1.60]	.066 [1.68]
D	.118 [3.00]	.124 [3.15]
E	.016 [0.41]	.060 [1.52]
F	.398 [10.11]	.412 [10.46]
G	.210 [5.33]	.230 [5.84]
H	.130 [3.30]	.170 [4.32]
I	.003 [0.08]	–
J	.158 [4.01]	.168 [4.27]
K	.177 [4.50]	.197 [5.00]

FEMALE

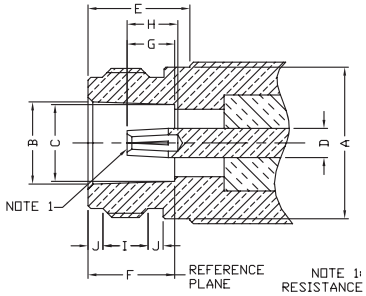

LETTER	INCHES [MILLIMETERS]	
	MINIMUM	MAXIMUM
A	–	.628 [15.93]
B	.336 [8.53]	.344 [8.74]
C	.316 [8.03]	.320 [8.13]
D	.118 [3.00]	.124 [3.15]
E	.422 [10.72]	–
F	.356 [9.04]	.362 [9.19]
G	.187 [4.75]	.207 [5.26]
H	.210 [5.33]	–
I	.172 [4.37]	.202 [5.13]
J	.047 [1.19]	.077 [1.96]

NOTE 1: I.D. TO MEET VSWR AND CONTACT RESISTANCE WHEN MATED WITH .063/.066 DIA. PIN

SPECIFICATIONS

ELECTRICAL SPECIFICATIONS
IMPEDANCE: 50 Ω
WORKING VOLTAGE RATING: 1,000 VRMS, CABLE DEPENDENT
FREQUENCY RANGE: 0-11 GHz

MECHANICAL SPECIFICATIONS
MATING: 5/8 - 24 THREADED COUPLING
INTERFACE: MIL-STD-348, SECTION 304
CABLING: CLAMP, SOLDER AND CRIMP

PLATING
G - GOLD
N - NICKEL
S - SILVER
WB - WHITE BRONZE

DIELECTRIC MATERIAL
T - TEFLON

CABLE GROUPS

GRP	FOR THESE CABLE TYPES
B	TIMES LMR-100A; RG-174, 188, 188A, 316/U; ALPHA 9174, 9316; BELDEN 7805A, 8216, 83269, 83284, 84316; COMMSCOPE AMC-174
B1	RG-316/U DOUBLE SHIELD; RD-316
C	TIMES LMR-195; RG-58, 58A, 58C, 141, 141A/U; ANDREW CNT-195, CNT-195-DB, CNT-195-FR; BELDEN 8219, 8240, 8259, 8262, 9201, 9203, 9310, 9311; COMMSCOPE WBC-195, WBC-195R, 0268, TCOM-195, TCOM-195-FR; HARBOUR HPF195
C1	RG-55, 55A, 55B, 142, 142A, 142B, 223, 400/U; ALPHA 9055, 9055B, 9223; BELDEN 7806A, 83242, 84142
C2	TIMES LMR-200, MSI-22; ALPHA 9848; BELDEN 7807A; COMMSCOPE AMC-58, WBC-200, WBC-200R, TCOM-200, TCOM-200-FR; HARBOUR HPF200
C3	RG-58/U PLENUM, RG-122/U; ALPHA 9859, 9158S; BELDEN 82240, 82907, 88240, 89907
D	RG-59, 59A, 59B, 62, 62A, 62C/U; ALPHA 9059, 9062, 9830, 9840, 9845; BELDEN 7807A, 8221, 8241, 9169, 9204, 9228; CANARE LV-61S; COMMSCOPE 5555, 5560, 5563; HARBOUR HPF200
E	TIMES AA-4478; RG-8, 8A, 213/U; ALPHA 9008, 9213; BELDEN 8267, 9251, 9880, 89880; INTERCOMP 4082, 22132
F	RG-9, 9A, 9B, 214/U; ALPHA 9214; BELDEN 8242, 8268
I	TIMES AA-5886, AA-6146, LMR-400, LMR-400 ULTRAFLEX; ANDREW CNT-400, CNT-400AL, CNT-400-DB, CNT-400-FR, CNT-400-FRP; BELDEN 7810A, 8214, 9913; COMMSCOPE TCOM-400, TCOM-400-FR, TCOM-400-PUR, WBC-400, WBC-400R, CUSHCRAFT ULTRALINK TL93605; HARBOUR HPF400
L2	TIMES LMR-600, LMR-600 ULTRAFLEX; ANDREW CNT-600, CNT-600-DB, CNT-600-FR, ; COMMSCOPE TCOM-600, TCOM-600-FR, TCOM-600-PUR, WBC-600, WBC-600R
L6	TIMES LMR-300; ANDREW CNT-300, CNT-300AL, CNT-300-DB, CNT-300-FR; BELDEN 7809; COMMSCOPE TCOM-300, TCOM-300-FR, WBC-300
M	TIMES MSI-15; RG-122/U; BELDEN 82907, 88240, 89907; MOTOROLA WHITE TEFLON
P	TIMES AA-3096; ANTENNA SPECIALIST K214, PRO-FLEX 800
PL	BELDEN 89913
SR1	.085 SEMI RIGID; RG-405/U; BELDEN 1671A; RD-179
SR2	.141 SEMI RIGID; RG-402/U; BELDEN 1673A
SR3	.250 SEMI RIGID; RG-401/U
X	TIMES LMR-240, LMR-240 ULTRAFLEX; RG-8X; ANDREW CNT-240, CNT-240AL, CNT-240ALS, CNT-240-DB, CNT-240-FR, CNT-240-W; BELDEN 9258; COMMSCOPE TCOM-240, TCOM-240-FR, WBC-240, WBC-240R; HARBOUR HPF240; MICRO 8/U; REMEE 1600; SAXTON 8315

FOR A MORE EXTENSIVE LISTING OF CABLE GROUPS, PLEASE REFER TO PAGES 131-133.

FIG. 1
RFN-1000-1S, -C2, -C2S, -N

FIG. 2
RFN-1001-S

FIG. 3
RFN-1002-1N, -1S, -1SI, -PL

FIG. 4
RFN-1002-2L2

Strain reliefs for RG-58/U — available separately
PT-4015-03-BK (black), PT-4015-03-BL (blue)

FIG. 5
RFN-1004-1SP, -1SX

FIG. 6
RFN-1005-1SR1, -1SR2

FIG. 7
RFN-1005-2N, -3C, -3C1, -7, -B-03, -B1-03, -C1, -C2, -C2S, RFN-1007-2SP, 1007-2SX, -1007-X

FIG. 8
RFN-1005-5

FIG. 9
RFN-1006-2L2

FIG. 10
RFN-1006-3E, -3F, -3I, -I, -L6, -PL

FIG. 11
RFN-1006-8I

FIG. 12
RFN-1006-8X

PHOTOS FOR REFERENCE ONLY, SHOWN AT 75% ACTUAL SIZE.

FOR MOUNTING CONFIGURATIONS REFER TO PAGES 137-151

PART #	FIG	DESCRIPTION	CBL GRP	NOTES	REPLACES OR EQUIVALENT TO	PLATING			RECOM-MENDED TOOL
						BDY	P/C	DIE	
RFN-1000-1S	1	MALE CLAMP	C, C1	FOR RG-58/U & RG-142/U	UG-536A/U	S	G	T	RFA-4009-206
RFN-1000-C2	1	MALE CLAMP	C2	FOR TIMES LMR-200		N	G	T	RFA-4009-206
RFN-1000-C2S	1	MALE CLAMP	C2	FOR TIMES LMR-200		S	G	T	RFA-4009-206
RFN-1000-N	1	MALE CLAMP	C, C1	FOR RG-58/U & RG-142/U	UG-536B/U	N	G	T	RFA-4009-206
RFN-1001-S	2	MALE SOLDER	C, C1, C2, D, E, F, I, P, X	FOR CABLE GROUP C, C1, C2 USE WITH REDUCER RFU-530, FOR CABLE GROUPS D, P & X USE WITH REDUCER RFU-531. CONNECTOR WILL ACCEPT MAXIMUM CENTER CONDUCTOR OF OD .108 [2.74]		S	G	T	SOLDER ONLY
RFN-1002-1N	3	MALE CLAMP	E	FOR RG-8/U	UG-21B/U, D/U, E/U	N	G	T	RFA-4009-206
RFN-1002-1S	3	MALE CLAMP	E	FOR RG-8/U	UG-21B/U, D/U, E/U	S	G	T	RFA-4009-206
RFN-1002-1SI	3	MALE CLAMP	I	FOR BELDEN 9913 & TIMES LMR-400		S	G	T	RFA-4005-200
RFN-1002-2L2	4	MALE CLAMP	L2	FOR TIMES LMR-600		S	G	T	SOLDER ONLY
RFN-1002-PL	3	MALE CLAMP	PL	FOR BELDEN 89913 PLENUM		S	G	T	RFA-4009-205
RFN-1004-1SP	5	MALE CLAMP	P	FOR PROFLEX		S	G	T	RFA-4009-206
RFN-1004-1SX	5	MALE CLAMP	X	FOR RG-8/X & TIMES LMR-240		S	G	T	RFA-4009-206
RFN-1005-1SR1	6	MALE	SR1	FOR .085 SEMI-RIGID	DIRECT SOLDER	N	G	T	SOLDER ONLY
RFN-1005-1SR2	6	MALE	SR2	FOR .141 SEMI-RIGID	DIRECT SOLDER	N	G	T	SOLDER ONLY
RFN-1005-2N	7	MALE CRIMP	C	FOR RG-58/U		N	G	T	RFA-4009-206
RFN-1005-3C	7	MALE CRIMP	C	FOR RG-58/U		S	G	T	RFA-4009-206
RFN-1005-3C1	7	MALE CRIMP	C1	FOR RG-142/U		S	G	T	RFA-4009-206
RFN-1005-5	8	MALE CRIMP	C	QUICK DISCONNECT, FOR RG-58/U		S	G	T	RFA-4009-206
RFN-1005-7	7	MALE CRIMP	C3, M	FOR MOTOROLA WHITE TEFLON, RG-58 PLENUM OR BELDEN 89907		S	G	T	RFA-4009-206
RFN-1005-B-03	7	MALE CRIMP	B	FOR RG-174/U & RG-316/U		N	G	T	RFA-4005-200
RFN-1005-B1-03	7	MALE CRIMP	B1	FOR RD-174/U & RG-316/U		N	G	T	RFA-4005-200
RFN-1005-C1	7	MALE CRIMP	C1	FOR RG-142/U		N	G	T	RFA-4009-206
RFN-1005-C2	7	MALE CRIMP	C2	FOR TIMES LMR-200		N	G	T	RFA-4009-206
RFN-1005-C2S	7	MALE CRIMP	C2	FOR TIMES LMR-200		S	G	T	RFA-4009-206
RFN-1006-2L2	9	MALE CRIMP	L2	FOR TIMES LMR-600		S	G	T	RFA-4005-305 & RFA-4009-201
RFN-1006-3E	10	MALE CRIMP	E	FOR RG-8/U	UG-1681/U	S	G	T	RFA-4009-205
RFN-1006-3F	10	MALE CRIMP	F	FOR RG-214/U	UG-1682/U	S	G	T	RFA-4009-205
RFN-1006-3I	10	MALE CRIMP	I	FOR BELDEN 9913 & TIMES LMR-400		S	G	T	RFA-4005-200
RFN-1006-8I	11	MALE CRIMP	I	FOR TIMES LMR-400; KNURLED SHELL; 2-PIECE DESIGN	FOR SOLID CENTER CONDUCOTR CABLE ONLY	N	G	T	RFA-4009-205
RFN-1006-8X	12	MALE CRIMP	X	FOR RG-8/X & TIMES LMR-240		N	G	T	RFA-4009-203

FIG. 13
RFN-1006-9I

FIG. 14
RFN-1006-9L2

FIG. 15
RFN-1006-9X

FIG. 16
RFN-1006-I-WB

FIG. 17
RFN-1009-3E, -3I, -PL

FIG. 18
RFN-1009-B-03,
-C-03, -C1-03

FIG. 19
RFN-1009-C, -C1, -C2

FIG. 20
RFN-1009-I

FIG. 21
RFN-1009-X-04

PHOTOS FOR REFERENCE ONLY, SHOWN AT 75% ACTUAL SIZE.

FOR MOUNTING CONFIGURATIONS REFER TO PAGES 137-151

PART #	FIG	DESCRIPTION	CBL GRP	NOTES	REPLACES OR EQUIVALENT TO	PLATING			RECOM-MENDED TOOL
						BDY	P/C	DIE	
RFN-1006-9I	13	MALE CRIMP	I	FOR BELDEN 9913 & TIMES LMR-400; HEX & KNURLED SHELL; 2-PIECE DESIGN	FOR SOLID CENTER CONDUCOTR CABLE ONLY	N	G	T	RFA-4009-205
RFN-1006-9L2	14	MALE CRIMP	L2	FOR TIMES LMR-600; HEX & KNURLED SHELL; 3-PIECE DESIGN WITH HEAT SHRINK		WB	G	T	RFA-4005-305 & RFA-4009-201
RFN-1006-9X	15	MALE CRIMP	X	FOR RG-8/X & TIMES LMR-240; 2-PIECE DESIGN		N	G	T	RFA-4009-203
RFN-1006-I	10	MALE CRIMP	I	FOR BELDEN 9913 & TIMES LMR-400		N	G	T	RFA-4005-200
RFN-1006-I-WB	16	MALE CRIMP	I	FOR BELDEN 9913 & TIMES LMR-400; HEX & KNURLED SHELL, WITH HEAT SHRINK	TIMES TC-400-NMH-D	WB	G	T	RFA-4005-200
RFN-1006-L6	10	MALE CRIMP	L6	FOR TIMES LMR-300		N	G	T	RFA-4005-301 & RFA-4005-308
RFN-1006-PL	10	MALE CRIMP	PL	FOR BELDEN 89913 PLENUM		S	G	T	RFA-4005-200
RFN-1007-2SP	7	MALE CRIMP	P	FOR PROFLEX		S	G	T	RFA-4009-203
RFN-1007-2SX	7	MALE CRIMP	X	FOR RG-8/X & TIMES LMR-240		S	G	T	RFA-4009-203
RFN-1007-X	7	MALE CRIMP	X	FOR RG-8/X & TIMES LMR-240		N	G	T	RFA-4005-301
RFN-1009-3E	17	MALE RIGHT ANGLE CRIMP	E	FOR RG-8/U		S	G	T	RFA-4009-205
RFN-1009-3I	17	MALE RIGHT ANGLE CRIMP	I	FOR BELDEN 9913 & TIMES LMR-400		S	G	T	RFA-4009-205
RFN-1009-B-03	18	MALE RIGHT ANGLE CRIMP	B	SQUARE BODY, FOR RG-174/U		N	G	T	RFA-4009-204
RFN-1009-C	19	MALE RIGHT ANGLE CRIMP	C	FOR RG-58/U		S	G	T	RFA-4009-206
RFN-1009-C-03	18	MALE RIGHT ANGLE CRIMP	C	SQUARE BODY, FOR RG-58/U		N	G	T	RFA-4009-206
RFN-1009-C1	19	MALE RIGHT ANGLE CRIMP	C1	FOR RG-142/U		S	G	T	RFA-4009-206
RFN-1009-C1-03	18	MALE RIGHT ANGLE CRIMP	C1	FOR RG-142/U, SQUARE BODY		N	G	T	RFA-4009-206
RFN-1009-C2	19	MALE RIGHT ANGLE CRIMP	C2	FOR TIMES LMR-200		S	G	T	RFA-4009-206
RFN-1009-I	20	MALE RIGHT ANGLE CRIMP	I	FOR BELDEN 9913 & TIMES LMR-400		WB	G	T	RFA-4009-205
RFN-1009-PL	17	MALE RIGHT ANGLE CRIMP	PL	FOR BELDEN 89913 PLENUM		S	G	T	RFA-4009-205
RFN-1009-X-04	21	MALE RIGHT ANGLE CRIMP	X	FOR RG-8/X & TIMES LMR-240		N	G	T	RFA-4009-203

FIG. 22
RFN-1010-1

FIG. 23
RFN-1011-1

FIG. 24
RFN-1012-1

FIG. 25
RFN-1013-1

FIG. 26
RFN-1013-1-03

FIG. 27
RFN-1014-1

FIG. 28
RFN-1020-1

FIG. 29
RFN-1021, -2

FIG. 30
RFS - 2068

FIG. 31
RFN-1021-03

FIG. 32
RFN-1021-1

FIG. 33
RFN-1021-11

FIG. 34
RFN-1021-14

FIG. 35
RFN-1021-2SR2

FIG. 36
RFN-1021-4

PHOTOS FOR REFERENCE ONLY, SHOWN AT 75% ACTUAL SIZE.

FOR MOUNTING CONFIGURATIONS REFER TO PAGES 137-151

PART #	FIG	DESCRIPTION	CBL GRP	NOTES	REPLACES OR EQUIVALENT TO	PLATING			RECOM-MENDED TOOL
						BDY	P/C	DIE	
RFN-1010-1	22	T ADAPTER		N DOUBLE FEMALE TO N MALE	UG-107B/U	S	G	T	
RFN-1011-1	23	T ADAPTER		N TRIPLE FEMALE	UG-28A/U	S	G	T	
RFN-1012-1	24	RIGHT ANGLE ADAPTER		N FEMALE TO N MALE	UG-27A/U, B/U, C/U, D/U	S	G	T	
RFN-1013-1	25	BARREL ADAPTER		N FEMALE TO N FEMALE	UG-29B/U, C/U	S	G	T	
RFN-1013-1-03	26	BARREL ADAPTER		N FEMALE TO N FEMALE		N	G	T	
RFN-1014-1	27	BARREL ADAPTER		N MALE TO N MALE	UG-57B/U	S	G	T	
RFN-1020-1	28	FEMALE PANEL MOUNT		2 HOLE FLANGE		S	G	T	
RFN-1021	29	FEMALE PANEL MOUNT		4 HOLE FLANGE	UG-58A/U	S	G	T	
RFS-2068	30	N FEMALE 4-HOLE PANEL MOUNT		SOLDER TAB		N	G	T	
RFN-1021-03	31	FEMALE PANEL MOUNT		4 HOLE FLANGE		N	G	T	
RFN-1021-1	29	FEMALE PANEL MOUNT		4 HOLE FLANGE WITH REMOVABLE PIN & FLUSH DIELECTRIC	UG-58A/U	S	G	T	
RFN-1021-11	33	FEMALE PANEL MOUNT		4 HOLE FLANGE W/ POST TERMINAL, EXTENDED DIELECTRIC		N	G	T	
RFN-1021-14	34	FEMALE PANEL MOUNT		4 HOLE FLANGE WITH SLOTTED TERMINAL CONTACT					
RFN-1021-2	29	FEMALE PANEL MOUNT		4 Hole Flange w/ Soldercup	UG-58A/U	N	G	T	
RFN-1021-2SR2	35	FEMALE PANEL MOUNT	SR2	4 HOLE FLANGE, DIRECT SOLDER, FOR .141" SEMI-RIGID CABLE	DIRECT SOLDER	S	G	T	
RFN-1021-4	36	FEMALE PANEL MOUNT		MINI 4 HOLE FLANGE W/ POST TERMINAL, .730" EXTENDED DIELECTRIC & O-RING		N	G	T	

FIG. 37
RFN-1021-5

FIG. 38
RFN-1021-6

FIG. 39
RFN-1022, -1

FIG. 40
RFN-1022-2SR2,
-SR1, -SR2, -SR3

FIG. 41
RFN-1022-3, -3-03

FIG. 42
RFN-1022-5, -5-03

FIG. 43
RFN-1022-8, -8-B1,
-8-C, -8-C1, -8-C2, -X

FIG. 44
RFN-1023

PHOTOS FOR REFERENCE ONLY, SHOWN AT 75% ACTUAL SIZE.

FOR MOUNTING CONFIGURATIONS REFER TO PAGES 137-151

PART #	FIG	DESCRIPTION	CBL GRP	NOTES	REPLACES OR EQUIVALENT TO	PLATING			RECOM-MENDED TOOL
						BDY	P/C	DIE	
RFN-1021-5	37	FEMALE PANEL MOUNT		MINI 4 HOLE FLANGE W/ POST TERMINAL, .260" EXTENDED DIELECTRIC & O-RING	.260	N	G	T	
RFN-1021-6	38	FEMALE CLAMP PANEL MOUNT	C, C1	4 HOLE FLANGE, FOR RG-58/U & RG-142/U	UG1095A/U, B/U, C/U	S	G	T	RFA-4009-206
RFN-1022	39	FEMALE BULKHEAD		FRONT MOUNT, NO D-FLAT		S	G	T	
RFN-1022-1	39	FEMALE BULKHEAD		FRONT MOUNT WITH DOUBLE D-FLAT	UG-680/U, A/U	S	G	T	
RFN-1022-2SR2	40	FEMALE BULKHEAD	SR2	REAR MOUNT WITH DOUBLE D-FLAT, FOR .141 SEMI-RIGID CABLE	DIRECT SOLDER	S	G	T	
RFN-1022-3	41	FEMALE BULKHEAD		FRONT MOUNT, LONG WITH DOUBLE D-FLAT		S	G	T	
RFN-1022-3-03	41	FEMALE BULKHEAD		FRONT MOUNT, LONG WITH DOUBLE D-FLAT		S	G	T	
RFN-1022-5	42	FEMALE BULKHEAD		FRONT MOUNT WITH D-FLAT & O-RING		N	G	T	
RFN-1022-5-03	42	FEMALE BULKHEAD		FRONT MOUNT WITH D-FLAT, .375" OPENING, BECU CONTACT		N	G	T	
RFN-1022-8	43	FEMALE CRIMP BULKHEAD	B	REAR MOUNT WITH O-RING, FOR RG-174/U	FOR RG-174/U & RG-316/U	N	G	T	RFA-4009-204
RFN-1022-8-B1	43	FEMALE CRIMP BULKHEAD	B1	REAR MOUNT W/ O-RING, FOR RG-316/U DOUBLE SHIELD	FOR RD-174/U & RD-316/U	N	G	T	RFA-4009-204
RFN-1022-8-C	43	FEMALE CRIMP BULKHEAD	C	REAR MOUNT WITH O-RING, FOR RG-58/U		N	G	T	RFA-4009-206
RFN-1022-8-C1	43	FEMALE CRIMP BULKHEAD	C1	REAR MOUNT WITH O-RING, FOR RG-142/U		N	G	T	RFA-4009-206
RFN-1022-8-C2	43	FEMALE CRIMP BULKHEAD	C2	REAR MOUNT WITH O-RING, FOR LMR-200		N	G	T	RFA-4009-206
RFN-1022-SR1	40	FEMALE BULKHEAD	SR1	REAR MOUNT WITH DOUBLE D-FLAT, FOR .085" SEMI-RIGID CABLE	DIRECT SOLDER	N	G	T	
RFN-1022-SR2	40	FEMALE BULKHEAD	SR2	REAR MOUNT WITH DOUBLE D-FLAT, FOR .141" SEMI-RIGID CABLE	DIRECT SOLDER	N	G	T	
RFN-1022-SR3	40	FEMALE BULKHEAD	SR3	REAR MOUNT WITH DOUBLE D-FLAT, FOR .250" SEMI-RIGID CABLE	DIRECT SOLDER	N	G	T	
RFN-1022-X	43	FEMALE CRIMP BULKHEAD	X	REAR MOUNT WITH O-RING, FOR LMR-240		N	G	T	RFA-4005-301
RFN-1023	44	BULKHEAD FRONT MOUNT ADAPTER		N FEMALE TO N FEMALE	UG-30C/U	S	G	T	

FIG. 45
RFN-1024-1, -1SI, -PL

FIG. 46
RFN-1025-1, -C2

FIG. 47
RFN-1026-1P, -1X

FIG. 48
RFN-1027, -C1, -C2, -N,
RFN-1029-SP, -SX

FIG. 49
RFN-1027-B, -SB

FIG. 50
RFN-1028-2L2

FIG. 51
RFN-1028, -F, -I, -PL, -SI

FIG. 52
RFN-1041-1

FIG. 53
RFN-1054-AV

FIG. 54
RFS-2030

PHOTOS FOR REFERENCE ONLY, SHOWN AT 75% ACTUAL SIZE.

FOR MOUNTING CONFIGURATIONS REFER TO PAGES 137-151

PART #	FIG	DESCRIPTION	CBL GRP	NOTES	REPLACES OR EQUIVALENT TO	PLATING			RECOM-MENDED TOOL
						BDY	P/C	DIE	
RFN-1024-1	45	FEMALE CLAMP	E	FOR RG-8/U	UG-23D/U, F/U	S	G	T	
RFN-1024-1SI	45	FEMALE CLAMP	I	FOR BELDEN 9913 & TIMES LMR-400		S	G	T	
RFN-1024-PL	45	FEMALE CLAMP	PL	FOR BELDEN 89913 PLENUM		S	G	T	
RFN-1025-1	46	FEMALE CLAMP	C, C1	FOR RG-58/U & RG-142/U		S	G	T	
RFN-1025-C2	46	FEMALE CLAMP	C2	FOR TIMES LMR-200		S	G	T	
RFN-1026-1P	47	FEMALE CLAMP	P	FOR PROFLEX		S	G	T	RFA-4009-206
RFN-1026-1X	47	FEMALE CLAMP	X	FOR RG-8/X & TIMES LMR-240		S	G	T	RFA-4009-206
RFN-1027	48	FEMALE CRIMP	C	FOR RG-58/U		N	G	T	RFA-4009-206
RFN-1027-B	49	FEMALE CRIMP	B	FOR RG-174/U & RG-316/U		N	G	T	RFA-4005-200
RFN-1027-C1	48	FEMALE CRIMP	C1	FOR RG-142		S	G	T	RFA-4009-206
RFN-1027-C2	48	FEMALE CRIMP	C2	FOR TIMES LMR-200		S	G	T	RFA-4009-206
RFN-1027-N	48	FEMALE CRIMP	C	FOR RG-58/U		N	G	T	RFA-4009-206
RFN-1027-SB	49	FEMALE CRIMP	B	FOR RG-174/U & RG-316/U		S	G	T	RFA-4005-200
RFN-1028	51	FEMALE CRIMP	E	FOR RG-8/U	AMPH. 82-0337	S	G	T	RFA-4009-205
RFN-1028-2L2	50	FEMALE CRIMP	L2	FOR TIMES LMR-600		S	G	T	RFA-4009-201
RFN-1028-F	51	FEMALE CRIMP	F	FOR RG-9/U & RG-214/U		S	G	T	RFA-4005-200
RFN-1028-I	51	FEMALE CRIMP	I	FOR BELDEN 9913 & TIMES LMR-400		N	G	T	RFA-4005-200
RFN-1028-PL	51	FEMALE CRIMP	PL	FOR BELDEN 89913 PLENUM		S	G	T	RFA-4005-200
RFN-1028-SI	51	FEMALE CRIMP	I	FOR BELDEN 9913 & TIMES LMR-400		S	G	T	RFA-4005-200
RFN-1029-SP	48	FEMALE CRIMP	P	FOR PROFLEX		S	G	T	RFA-4009-203
RFN-1029-SX	48	FEMALE CRIMP	X	FOR RG-8/X & TIMES LMR-240		S	G	T	RFA-4009-203
RFN-1041-1	52	MALE PANEL MOUNT		4 HOLE FLANGE, SOLDERCUP		S	G	T	
RFN-1054-AV	53	RIGHT ANGLE ADAPTER		N MALE TO N MALE		N	G	T	
RFS-2030	54	N FEMALE BULKHEAD VERTI-CAL PCB MOUNT		DOUBLE D FLAT, 1.645" THREADS		N	S	T	

QMA (Quick Mate)

QMA

PLUG

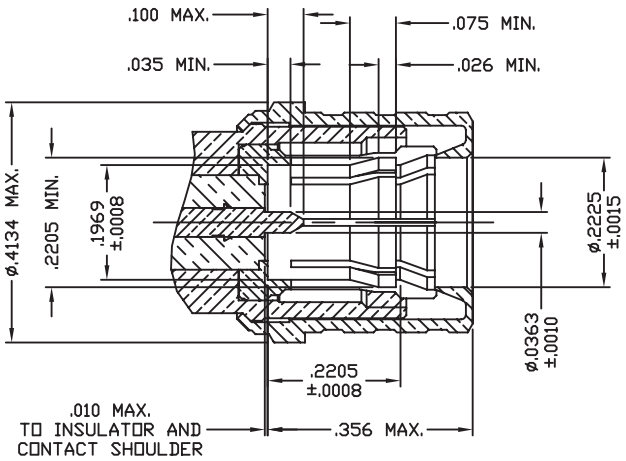

JACK

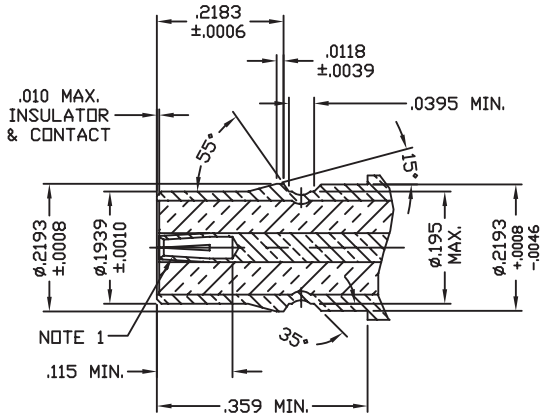

NOTE 1: I.D. TO MEET VSWR AND CONTACT RESISTANCE WHEN MATED WITH .0355/.0370 DIA. PIN

SPECIFICATIONS

ELECTRICAL SPECIFICATIONS
IMPEDANCE: 50 Ω
WORKING VOLTAGE RATING: 335 VRMS SEA LEVEL
FREQUENCY RANGE: 0-6 GHz

MECHANICAL SPECIFICATIONS
MATING: FORCE TO ENGAGE
CABLING: CRIMP AND SOLDER

PLATING
G - GOLD
WB - WHITE BRONZE

DIELECTRIC MATERIAL
T - TEFLON

CABLE GROUPS

GRP	FOR THESE CABLE TYPES
C	TIMES LMR-195; RG-58, 58A, 58C, 141, 141A/U; ANDREW CNT-195, CNT-195-DB, CNT-195-FR; BELDEN 8219, 8240, 8259, 8262, 9201, 9203, 9310, 9311; COMMSCOPE WBC-195, WBC-195R, 0268, TCOM-195, TCOM-195-FR; HARBOUR HPF195
C1	RG-55, 55A, 55B, 142, 142A, 142B, 223, 400/U; ALPHA 9055, 9055B, 9223; BELDEN 7806A, 83242, 84142
C2	ALPHA 9848; COMMSCOPE BWC-200, BWC-200R; TIMES LMR-200, MSI-22
X	RG-8X; BELDEN 9258; COMMSCOPE BWC-240, BWC-240R; MICRO 8/U; REMEE 1600; SAXTON 8315; TIMES LMR-240, LMR-240 ULTRAFLEX

FOR A MORE EXTENSIVE LISTING OF CABLE GROUPS, PLEASE REFER TO PAGES 131-133.

FIG. 1
RQA-5000-C, -C1, -X

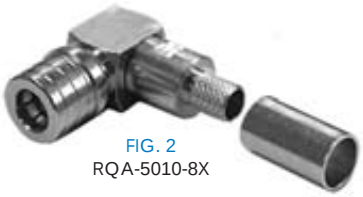

FIG. 2
RQA-5010-8X

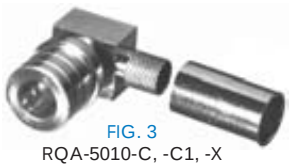

FIG. 3
RQA-5010-C, -C1, -X

FIG. 4
QMA -TOOL

PHOTOS FOR REFERENCE ONLY, SHOWN AT 100% ACTUAL SIZE.

FOR MOUNTING CONFIGURATIONS REFER TO PAGES 137-151

PART #	FIG	DESCRIPTION	CBL GRP	NOTES	PLATING			RECOM-MENDED TOOL
					BDY	P/C	DIE	
RQA-5000-C	1	QMA PLUG, CRIMP (SNAP LOCK)	C, C2		WB	G	T	RFA-4009-206
RQA-5000-C1	1	QMA PLUG, CRIMP (SNAP LOCK)	C1		WB	G	T	RFA-4009-206
RQA-5000-X	1	QMA PLUG, CRIMP (SNAP LOCK)	X		WB	G	T	RFA-4005-100
RQA-5010-8X	2	QMA RIGHT-ANGLE PLUG, CRIMP (SNAP LOCK)	X	SOLDERLESS CONTACT, INCLUDES HEAT SHRINK	WB	G	T	RFA-4009-203
RQA-5010-C	3	QMA RIGHT-ANGLE PLUG, CRIMP (SNAP LOCK)	C, C2		WB	G	T	RFA-4009-206
RQA-5010-C1	3	QMA RIGHT-ANGLE PLUG, CRIMP (SNAP LOCK)	C1		WB	G	T	RFA-4009-206
RQA-5010-X	3	QMA RIGHT-ANGLE PLUG, CRIMP (SNAP LOCK)	X		WB	G	T	RFA-4009-203
QMA-TOOL	4	ASSEMBLY TOOL FOR PRESSING CAP ON RIGHT ANGLE PLUG			SST	—	—	

For more information or custom products call us or go to our website. See cover for contact information.

SPECIFICATIONS	CABLE GROUPS	
ELECTRICAL SPECIFICATIONS IMPEDANCE: 75 Ω WORKING VOLTAGE RATING: N/A **MECHANICAL SPECIFICATIONS** MATING: PUSH-ON **PLATING** G - GOLD N - NICKEL **DIELECTRIC MATERIAL** D - DELRIN PP - POLYPROPYLENE	**GRP**	**FOR THESE CABLE TYPES**
	D	RG-59, 59A, 59B, 62, 62A, 62C/U; ALPHA 9059, 9062, 9830, 9840, 9845; BELDEN 8221, 8241, 9169, 9204, 9228; CANARE LV-61S; COMMSCOPE 5555, 5560, 5563
	FOR A MORE EXTENSIVE LISTING OF CABLE GROUPS, PLEASE REFER TO PAGES 131-133.	

FIG. 1
RCA-1902

FIG. 2
RCA-1903

FIG. 3
RCA-1904-01-D,
-02-D, -03-D

FIG. 4
RCA-1950-03

PHOTOS FOR REFERENCE ONLY, SHOWN AT 100% ACTUAL SIZE.

FOR MOUNTING CONFIGURATIONS REFER TO PAGES 137-151

PART #	FIG	DESCRIPTION	CBL GRP	NOTES	PLATING			RECOM-MENDED TOOL
					BDY	P/C	DIE	
RCA-1902	1	MALE CRIMP	D	FOR RG-59/U	N	N	PP	RFA-4009-203
RCA-1903	2	MALE SOLDER	D	INTREGRAL SPRING STRAIN RELIEF: FOR RG-59/U	G	G	PP	
RCA-1904-01-D	3	MALE COMPRESSION CRIMP	D	RED RING: FOR RG-59/U	N	N	PP	RFA-4004-20
RCA-1904-02-D	3	MALE COMPRESSION CRIMP	D	WHITE RING: FOR RG-59/U	N	N	PP	RFA-4004-20
RCA-1904-03-D	3	MALE COMPRESSION CRIMP	D	YELLOW RING: FOR RG-59/U	N	N	PP	RFA-4004-20
RCA-1950-03	4	RCA JACK TO RCA JACK BULKHEAD ADAPTER		WITH D-FLAT	N	G	D	

WIFI Reverse Polarity Rev Polarity/Thread and Reverse Thread on page 51-56

MALE

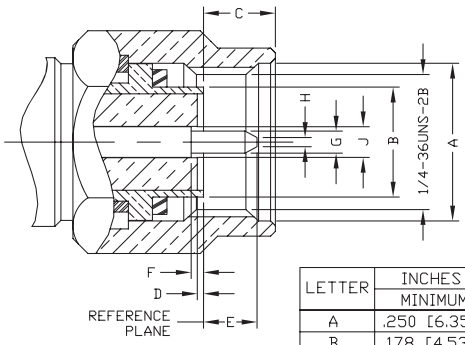

LETTER	INCHES [MILLIMITERS]	
	MINIMUM	MAXIMUM
A	.250 [6.35]	.265 [6.73]
B	.178 [4.53]	.181 [4.59]
C	.100 [2.54]	.135 [3.43]
D	.000	.010 [0.25]
E	.075 [1.91]	.100 [2.54]
F	.000	.010 [0.25]
G	.035 [0.90]	.037 [0.94]
H	.000	.015 [0.38]
J	.049 [1.24]	.051 [1.30]

FEMALE

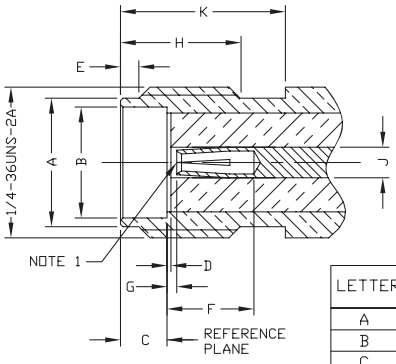

LETTER	INCHES [MILLIMITERS]	
	MINIMUM	MAXIMUM
A	.208 [5.28]	.216 [5.49]
B	.181 [4.60]	.184 [4.67]
C	.074 [1.88]	.078 [1.98]
D	.000	.010 [0.25]
E	.015 [0.38]	.045 [1.14]
F	.115 [2.92]	–
G	.000	.010 [0.25]
H	.170 [4.32]	–
J	.049 [1.24]	.051 [1.30]
K	.218 [5.54]	–

NOTE 1: I.D. TO MEET VSWR AND CONTACT RESISTANCE WHEN MATED WITH .052"/.054" DIA. PIN

SPECIFICATIONS

ELECTRICAL SPECIFICATIONS — FLEX CABLE
IMPEDANCE: 50 Ω
WORKING VOLTAGE RATING: 500 VRMS (RG-58)
WORKING VOLTAGE RATING: 375 VRMS (RG-316)
FREQUENCY RANGE: 0-12.4 GHz & 18 GHz

ELECTRICAL SPECIFICATIONS — SEMI-RIGID CABLE
IMPEDANCE: 50 Ω
WORKING VOLTAGE RATING: 500 VRMS
FREQUENCY RANGE: 0-18 GHZ

MECHANICAL SPECIFICATIONS
MATING: 1/4 - 18 THREADED COUPLING
INTERFACE: MIL-STD-348A, SECTION 310
CABLING: CLAMP, CRIMP AND SOLDER

PLATING
G - GOLD
N - NICKEL
SS - STAINLESS STEEL

DIELECTRIC MATERIAL
T - TEFLON

CABLE GROUPS

GRP	FOR THESE CABLE TYPES
A	RG-178, 178A, 178B, 196, 196A/U; Belden 83265
B	Times LMR-100A; RG-174, 188, 188A, 316/U; Alpha 9174, 9316; Belden 7805a, 8216, 83269, 83284, 84316; commscope amc-174
B1	RG-316/U Double Shield; RD-316
C	Times LMR-195; RG-58, 58A, 58C, 141, 141A/u; andrew cnt-195, cnt-195-db, cnt-195-fr; Belden 8219, 8240, 8259, 8262, 9201, 9203, 9310, 9311; CommScope WBC-195, WBC-195R, 0268, tcom-195, tcom-195-fr; harbour HPF195
C1	RG-55, 55A, 55B, 142, 142A, 142B, 223, 400/U; Alpha 9055, 9055B, 9223; Belden 7806a, 83242, 84142
C2	Times LMR-200, MSI-22; Alpha 9848; BELDEN 7807A; CommScope amc-58, WBC-200, WBC-200R, TCOM-200, TCOM-200-FR; HARBOUR HPF200
I	Times AA-5886, AA-6146, LMR-400, LMR-400 UltraFlex; ANDREW CNT-400, CNT-400AL, cnt-400-db, CNT-400-FR, CNT-400-FRP; Belden 7810A, 8214, 9913; CommScope TCOM-400, TCOM-400-FR, TCOM-400-PUR, WBC-400, WBC-400R, Cushcraft Ultralink TL93605; hARBOUR HPF400
M	TIMES MSI-15; RG-122/U; BELDEN 82907, 88240, 89907; MOTOROLA WHITE TEFLON
SR0	.047 Semi Rigid; m17/151
SR1	.085 Semi Rigid; RG-405/U; Belden 1671A; RD-179
SR2	.141 Semi Rigid; RG-402/U; Belden 1673A
X	Times LMR-240, LMR-240 UltraFlex; RG-8X; ANDREW CNT-240, CNT-240AL, CNT-240ALS, CNT-240-DB, CNT-240-FR, CNT-240-W; Belden 9258; CommScope TCOM-240, TCOM-240-FR, WBC-240, WBC-240R; HARBOUR HPF240; Micro 8/U; Remee 1600; Saxton 8315

FOR A MORE EXTENSIVE LISTING OF CABLE GROUPS, PLEASE REFER TO PAGES 131-139.

FIG. 1
RSA-3000-1B, -1B-03, -1B1, -A, -B, -B1, B-SS

FIG. 2
RSA-3000-1C, -1C1, -C, -C1, -C2

FIG. 3
RSA-3000-1C-03

FIG. 4
RSA-3000-I

PHOTOS FOR REFERENCE ONLY, SHOWN AT 100% ACTUAL SIZE.

FOR MOUNTING CONFIGURATIONS REFER TO PAGES 140-157

For more information or custom products call us or go to our website. See cover for contact information.

FIG. 5
RSA-3000-7, -X

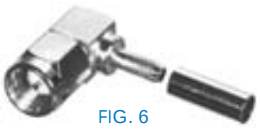

FIG. 6
RSA-3010-1B, -1B-04, -1B1, -B, -B1, B-SS

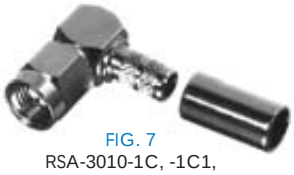

FIG. 7
RSA-3010-1C, -1C1, -7, -C, -C1, C2, -X

FIG. 8
RSA-3050-1B, -1B1, -B, -B1

PHOTOS FOR REFERENCE ONLY, SHOWN AT 100% ACTUAL SIZE.

FOR MOUNTING CONFIGURATIONS REFER TO PAGES 137-151

PART #	FIG	DESCRIPTION	CBL GRP	NOTES	PLATING			RECOM-MENDED TOOL
					BDY	P/C	DIE	
RSA-3000-1B	1	MALE CRIMP	B	FOR RG-174/U	G	G	T	RFA-4009-204 & RFA-4089
RSA-3000-1B-03	1	MALE CRIMP	B	FOR RG-174/U	SS/G	G	T	RFA-4009-204
RSA-3000-1B1	1	MALE CRIMP	B1	FOR RG-316/U DOUBLE SHIELD	G	G	T	RFA-4009-204 & RFA-4089
RSA-3000-1C	2	MALE CRIMP	C	FOR RG-58/U	G	G	T	RFA-4009-206
RSA-3000-1C-03	3	MALE CRIMP	C	FOR RG-58/U, W/ SHRINK TUBE	G	G	T	RFA-4009-206
RSA-3000-1C1	2	MALE CRIMP	C1	FOR RG-142/U	G	G	T	RFA-4009-206
RSA-3000-1C2	2	MALE CRIMP	C2	FOR LMR-200	G	G	T	RFA-4009-206
RSA-3000-7	5	MALE CRIMP	C3, M	FOR PLENUM RG-58/U, MOTOROLA WHITE CABLE	N	G	T	RFA-4009-206
RSA-3000-A	1	MALE CRIMP	A	FOR RG-178/U	N	G	T	RFA-4009-204 & RFA-4089
RSA-3000-B	1	MALE CRIMP	B	FOR RG-174/U	N	G	T	RFA-4009-204 & RFA-4089
RSA-3000-B1	1	MALE CRIMP	B1	FOR RG-316/U DOUBLE SHIELD	N	G	T	RFA-4009-204 & RFA-4089
RSA-3000-B-SS	1	MALE CRIMP	B	FOR RG-174/U	SS	G	T	RFA-4009-204 & RFA-4089
RSA-3000-C	2	MALE CRIMP	C	FOR RG-58/U	N	G	T	RFA-4009-206
RSA-3000-C1	2	MALE CRIMP	C1	FOR RG-142/U	N	G	T	RFA-4009-206
RSA-3000-C2	2	MALE CRIMP	C2	FOR TIMES LMR-200	N	G	T	RFA-4005-301
RSA-3000-I	4	MALE CRIMP	I	FOR BELDEN 9913 & TIMES LMR-400	N	G	T	RFA-4009-205
RSA-3000-X	5	MALE CRIMP	X	FOR RG-8X & TIMES LMR-240	N	G	T	RFA-4009-203
RSA-3010-1B	6	MALE RIGHT ANGLE CRIMP	B	FOR RG-174/U	G	G	T	RFA-4009-204
RSA-3010-1B-04	6	MALE RIGHT ANGLE CRIMP	B	FOR RG-174/U	SS/G	G	T	RFA-4009-204
RSA-3010-1B1	6	MALE RIGHT ANGLE CRIMP	B1	FOR RG-316/U DOUBLE SHIELD	G	G	T	RFA-4009-204
RSA-3010-1C	7	MALE RIGHT ANGLE CRIMP	C	FOR RG-58/U	G	G	T	RFA-4009-206
RSA-3010-1C1	7	MALE RIGHT ANGLE CRIMP	C	FOR RG-58/U	G	G	T	RFA-4009-206
RSA-3010-B	6	MALE RIGHT ANGLE CRIMP	B	FOR RG-174/U	N	G	T	RFA-4009-204
RSA-3010-B1	6	MALE RIGHT ANGLE CRIMP	B1	FOR RG-316/U DOUBLE SHIELD	N	G	T	RFA-4009-204
RSA-3010-B-SS	6	MALE RIGHT ANGLE CRIMP	B1	FOR RG-316/U DOUBLE SHIELD	SS	G	T	RFA-4009-204
RSA-3010-C	7	MALE RIGHT ANGLE CRIMP	C	FOR RG-58/U	N	G	T	RFA-4009-206
RSA-3010-C1	7	MALE RIGHT ANGLE CRIMP	C1	FOR RG-142/U	N	G	T	RFA-4009-206
RSA-3010-C2	7	MALE RIGHT ANGLE CRIMP	C2	FOR TIMES LMR-200	N	G	T	RFA-4009-206
RSA-3010-X	7	MALE RIGHT ANGLE CRIMP	X	FOR RG-8X & TIMES LMR-240	N	G	T	RFA-4009-203
RSA-3010-7	7	MALE RIGHT ANGLE CRIMP	C3, M	FOR MOTOROLA WHITE TEFLON, BELDEN 89907	N	G	T	RFA-4009-206
RSA-3010-7-B	7	MALE RIGHT ANGLE CRIMP	B	STAINLESS STEEL NUT WITH GOLD BODY, FOR RG-174/U	SS	G	T	RFA-4009-204
RSA-3050-1B	8	FEMALE CRIMP	B	FOR RG-174/U	G	G	T	RFA-4009-204
RSA-3050-1B1	8	FEMALE CRIMP	B1	FOR RG-316/U DOUBLE SHIELD	G	G	T	RFA-4009-204

FIG. 9
RSA-3050-1C, -1C1, -1C2, -C, -C1, -C2

FIG. 10
RSA-3050-X

FIG. 11
RSA-3100-B

FIG. 12
RSA-3100-C

FIG. 13
RSA-3110-B, -C

FIG. 14
RSA-3200, -1

FIG. 15
RSA-3221

FIG. 16
RSA-3231, RSA-3232-1

FIG. 17
RSA-3250

FIG. 18
RSA-3251

FIG. 19
RSA-3251-1-10

FIG. 20
RSA-3252-1B, -1B1, 1A, -A-4, -B

FIG. 21
RSA-3252-1I

FIG. 22
RSA-3252-B-03, -B1

PHOTOS FOR REFERENCE ONLY, SHOWN AT 100% ACTUAL SIZE.

FOR MOUNTING CONFIGURATIONS REFER TO PAGES 137-151

PART #	FIG	DESCRIPTION	CBL GRP	NOTES	PLATING			RECOM-MENDED TOOL
					BDY	P/C	DIE	
RSA-3050-1C	9	FEMALE CRIMP	C	FOR RG-58/U	G	G	T	RFA-4009-206
RSA-3050-1C1	9	FEMALE CRIMP	C1	FOR RG-142/U	G	G	T	RFA-4009-206
RSA-3050-1C2	9	FEMALE CRIMP	C2	FOR TIMES LMR-200	G	G	T	RFA-4009-206
RSA-3050-B	8	FEMALE CRIMP	B	FOR RG-174/U	N	G	T	RFA-4009-204
RSA-3050-B1	8	FEMALE CRIMP	B1	FOR RG-316/U DOUBLE SHIELD	N	G	T	RFA-4009-204
RSA-3050-C	9	FEMALE CRIMP	C	FOR RG-58/U	N	G	T	RFA-4009-206
RSA-3050-C1	9	FEMALE CRIMP	C1	FOR RG-142/U	N	G	T	RFA-4009-206
RSA-3050-C2	9	FEMALE CRIMP	C2	FOR TIMES LMR-200	N	G	T	RFA-4009-206
RSA-3050-X	10	FEMALE CRIMP	X	FOR RG-8X & TIMES LMR-240	N	G	T	RFA-4009-203
RSA-3100-B	11	MALE CLAMP	B	FOR RG-174/U	N	G	T	
RSA-3100-C	12	MALE CLAMP	C	FOR RG-58/U	N	G	T	
RSA-3110-B	13	MALE RIGHT ANGLE CLAMP	B	FOR RG-174/U	N	G	T	
RSA-3110-C	13	MALE RIGHT ANGLE CLAMP	C	FOR RG-58/U	N	G	T	
RSA-3200	14	MALE BULKHEAD		FRONT MOUNT WITH SOLDER CUP & D-FLAT	N	G	T	
RSA-3200-1	14	MALE BULKHEAD		FRONT MOUNT WITH SOLDER CUP & D-FLAT	G	G	T	
RSA-3221	15	MALE PANEL MOUNT		2 HOLE FLANGE WITH SOLDER CUP	N	G	T	
RSA-3231	16	MALE PANEL MOUNT		4 HOLE FLANGE WITH SOLDER CUP	N	G	T	
RSA-3232-1	16	MALE PANEL MOUNT		4 HOLE FLANGE WITH .126" EXT. DIELECTRIC & .012" DIA. PROBE	G	G	T	
RSA-3250	17	FEMALE BULKHEAD		FRONT MOUNT WITH SOLDER CUP & D-FLAT	N	G	T	
RSA-3251	18	FEMALE BULKHEAD		REAR MOUNT WITH SOLDER CUP & D-FLAT	N	G	T	
RSA-3251-1-10	19	FEMALE BULKHEAD		REAR MOUNT WITH SOLDER CUP, HEX FLANGE, D-FLAT & O-RING	G	G	T	
RSA-3252-1B	20	FEMALE BULKHEAD	B	REAR MOUNT WITH D-FLAT, FOR RG-174/U	G	G	T	RFA-4009-204
RSA-3252-1B1	20	FEMALE BULKHEAD	B1	REAR MOUNT WITH D-FLAT, FOR RG-316/U DOUBLE SHIELD	G	G	T	RFA-4009-204
RSA-3252-1I	21	FEMALE BULKHEAD	I	REAR MOUNT WITH D-FLAT, FOR LMR-400	G	G	T	RFA-4009-205
RSA-3252-A	20	FEMALE BULKHEAD	A	REAR MOUNT WITH D-FLAT, FOR RG-178/U	N	G	T	RFA-4009-204
RSA-3252-A-4	20	FEMALE CRIMP BULKHEAD	A	REVERSE POLARITY [GENDER], FOR RG-178/U	N	G	T	RFA-4005-301
RSA-3252-B	20	FEMALE CRIMP BULKHEAD	B	REAR MOUNT WITH D-FLAT, FOR RG-174/U	N	G	T	RFA-4009-204
RSA-3252-B-03	22	FEMALE CRIMP BULKHEAD	B	REAR MOUNT WITH GASKET & D-FLAT, FOR RG-174/U	N	G	T	RFA-4009-204
RSA-3252-B1	22	FEMALE CRIMP BULKHEAD	B1	REAR MOUNT W/ D-FLAT, FOR RG-316/U DOUBLE SHIELD	N	G	T	RFA-4009-204

FIG. 23
RSA-3252-C,
-C1, -C2

FIG. 24
RSA-3261

FIG. 25
RSA-3262, -1

FIG. 26
RSA-3268

FIG. 27
RSA-3269

FIG. 28
RSA-3270-C

FIG. 29
RSA-3271

FIG. 30
RSA-3279

FIG. 31
RSA-3279-10

FIG. 32
RSA-3285-03

FIG. 33
RSA-3300, -1

FIG. 34
RSA-3300-1-03
-NL, -NL-03

FIG. 35
RSA-3350, -1

FIG. 36
RSA-3350-2-1

FIG. 37
RSA-3400, -1

PHOTOS FOR REFERENCE ONLY, SHOWN AT 100% ACTUAL SIZE.

FOR MOUNTING CONFIGURATIONS REFER TO PAGES 137-151

PART #	FIG	DESCRIPTION	CBL GRP	NOTES	PLATING			RECOM-MENDED TOOL
					BDY	P/C	DIE	
RSA-3252-C	23	FEMALE CRIMP BULKHEAD	C	REAR MOUNT WITH D-FLAT, FOR RG-58/U	N	G	T	RFA-4009-206
RSA-3252-C1	23	FEMALE CRIMP BULKHEAD	C1	REAR MOUNT WITH D-FLAT, FOR RG-142/U	N	G	T	RFA-4009-206
RSA-3252-C2	23	FEMALE CRIMP BULKHEAD	C2	REAR MOUNT WITH D-FLAT, FOR LMR-200	N	G	T	RFA-4009-206
RSA-3261	24	FEMALE PANEL MOUNT		2 HOLE FLANGE WITH SOLDER CUP	N	G	T	
RSA-3262	25	FEMALE PANEL MOUNT		2 HOLE FLANGE WITH POST TERMINAL	N	G	T	
RSA-3262-1	25	FEMALE PANEL MOUNT		2 HOLE FLANGE WITH POST TERMINAL	G	G	T	
RSA-3268	26	FEMALE PANEL MOUNT		2 HOLE FLANGE WITH .196" EXTENDED DIELECTRIC & POST TERMINAL	N	G	T	
RSA-3269	27	FEMALE PANEL MOUNT		2 HOLE FLANGE WITH .590" EXTENDED DIELECTRIC & POST TERMINAL	N	G	T	
RSA-3270-C	28	FEMALE CRIMP PANEL MOUNT	C	4 HOLE FLANGE, FOR RG-58/U	N	G	T	RFA-4009-206
RSA-3271	29	FEMALE PANEL MOUNT		4 HOLE FLANGE WITH SOLDER CUP	N	G	T	
RSA-3279	30	FEMALE PANEL MOUNT		4 HOLE FLANGE WITH .590" EXTENDED DIELECTRIC & POST TERMINAL	N	G	T	
RSA-3279-10	31	FEMALE PANEL MOUNT		4 HOLE FLANGE WITH .126" EXTENDED DIELECTRIC & POST TERMINAL	G	G	T	
RSA-3285-03	32	FEMALE PANEL MOUNT		4 HOLE RIGHT ANGLE FLANGE WITH POST TERMINAL	N	G	T	
RSA-3300	33	FEMALE RIGHT ANGLE PCB MOUNT			N	G	T	
RSA-3300-1	33	FEMALE RIGHT ANGLE PCB MOUNT			G	G	T	
RSA-3300-1-03	34	FEMALE RIGHT ANGLE BULKHEAD PCB MOUNT				G	G	T
RSA-3300-NL	34	FEMALE RIGHT ANGLE BULKHEAD PCB MOUNT			G	G	T	
RSA-3300-NL-03	34	FEMALE RIGHT ANGLE BULKHEAD PCB MOUNT			G	G	T	
RSA-3350	35	FEMALE VERTICAL PCB MOUNt			N	G	T	
RSA-3350-1	35	FEMALE VERTICAL PCB MOUNT			G	G	T	
RSA-3350-2-1	36	FEMALE VERTICAL PCB MOUNT		LEGS .245"	G	G	T	
RSA-3400	37	T-ADAPTER		SMA MALE TO DOUBLE SMA FEMALE	N	G	T	
RSA-3400-1	37	T-ADAPTER		SMA MALE TO DOUBLE SMA FEMALE	G	G	T	

SMA CONNECTORS AND IN-SERIES ADAPTERS — continued

FIG. 38
RSA-3401

FIG. 39
RSA-3402, -1

FIG. 40
RSA-3403, -1

FIG. 41
RSA-3404

FIG. 42
RSA-3405, -1

FIG. 43
RSA-3410, -1

FIG. 44
RSA-3500-085, -1-085,
RSA-3505-085-03

FIG. 45
RSA-3500-141,
-1-141, -141-03

FIG. 46
RSA-3510-085,
-1-085

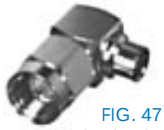
FIG. 47
RSA-3510-141,
-1-141

FIG. 48
RSA-3550-085,
-1-085

FIG. 49
RSA-3555-1-047, -1SR1,
-1SR2, -SR1, -SR2

FIG. 50
RSA-3560-141,
-1-047, -1-SR1

FIG. 51
RSA-3565-SR2

FIG. 52
RSA-3570-085

PHOTOS FOR REFERENCE ONLY, SHOWN AT 100% ACTUAL SIZE.

FOR MOUNTING CONFIGURATIONS REFER TO PAGES 137-151

PART #	FIG	DESCRIPTION	CBL GRP	NOTES	PLATING			RECOM-MENDED TOOL
					BDY	P/C	DIE	
RSA-3401	38	T-ADAPTER		SMA TRIPLE FEMALE	N	G	T	
RSA-3402	39	RIGHT ANGLE ADAPTER		SMA MALE TO SMA FEMALE	N	G	T	
RSA-3402-1	39	RIGHT ANGLE ADAPTER		SMA MALE TO SMA FEMALE	G	G	T	
RSA-3403	40	ADAPTER		SMA MALE TO SMA MALE	N	G	T	
RSA-3403-1	40	ADAPTER		SMA MALE TO SMA MALE	G	G	T	
RSA-3404	41	ADAPTER		SMA FEMALE TO SMA FEMALE	N	G	T	
RSA-3405	42	ADAPTER		SMA MALE TO SMA FEMALE	N	G	T	
RSA-3405-1	42	ADAPTER		SMA MALE TO SMA FEMALE	G	G	T	
RSA-3410	43	BULKHEAD ADAPTER		SMA FEMALE TO SMA FEMALE WITH D-FLAT	N	G	T	
RSA-3410-1	43	BULKHEAD ADAPTER		SMA FEMALE TO SMA FEMALE WITH D-FLAT	G	G	T	
RSA-3500-085	44	MALE	SR1	FOR .085 SEMI-RIGID CABLE	N	G	T	
RSA-3500-1-085	44	MALE	SR1	FOR .085 SEMI-RIGID CABLE	G	G	T	
RSA-3500-141	45	MALE	SR2	FOR .141 SEMI-RIGID CABLE	N	G	T	
RSA-3500-1-141	45	MALE	SR2	FOR .141 SEMI-RIGID CABLE	G	G	T	
RSA-3500-141-03	45	MALE	SR2	FOR .141 SEMI-RIGID CABLE	SS	G	T	
RSA-3505-085-03	44	MALE	SR1	FOR .085 SEMI-RIGID CABLE, THICK WALL	SS	G	T	
RSA-3510-085	46	MALE RIGHT ANGLE	SR1	FOR .085 SEMI-RIGID CABLE	N	G	T	
RSA-3510-1-085	46	MALE RIGHT ANGLE	SR1	FOR .085 SEMI-RIGID CABLE	G	G	T	
RSA-3510-141	47	MALE RIGHT ANGLE	SR2	FOR .141 SEMI-RIGID CABLE	N	G	T	
RSA-3510-1-141	47	MALE RIGHT ANGLE	SR2	FOR .141 SEMI-RIGID CABLE	G	G	T	
RSA-3550-085	48	FEMALE PANEL MOUNT	SR1	2 HOLE FLANGE FOR .085 SEMI-RIGID CABLE	N	G	T	
RSA-3550-1-085	48	FEMALE PANEL MOUNT	SR1	2 HOLE FLANGE FOR .085 SEMI-RIGID CABLE	G	G	T	
RSA-3555-1-047	49	FEMALE	SR0	FOR .047 SEMI-RIGID CABLE	G	G	T	
RSA-3555-1SR1	49	FEMALE	SR1	FOR .085 SEMI-RIGID CABLE	G	G	T	
RSA-3555-1SR2	49	FEMALE	SR2	FOR .141 SEMI-RIGID CABLE	G	G	T	
RSA-3555-SR1	49	FEMALE	SR1	FOR .085 SEMI-RIGID CABLE	N	G	T	
RSA-3555-SR2	49	FEMALE	SR2	FOR .141 SEMI-RIGID CABLE	N	G	T	
RSA-3560-1-047	50	FEMALE BULKHEAD	SR0	FOR .047 SEMI-RIGID CABLE	G	G	T	
RSA-3560-1-SR1	50	FEMALE BULKHEAD	SR1	REAR MOUNT, FOR .085 SEMI-RIGID CABLE	G	G	T	
RSA-3560-141	50	FEMALE BULKHEAD	SR2	REAR MOUNT, FOR .141 SEMI-RIGID CABLE	N	G	T	
RSA-3565-SR2	51	MALE	SR2	FOR .141 SEMI-RIGID CABLE	SS/G	—	—	
RSA-3570-085	52	FEMALE PANEL MOUNT	SR1	4 HOLE FLANGE FOR .085 SEMI RIGID CABLE	N	G	T	

For more information or custom products call us or go to our website. See cover for contact information.

Find Reverse Polarity on page 51-56

SMB 50 Ohm

PLUG

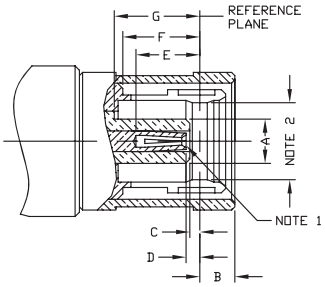

LETTER	INCHES [MILLIMITERS]	
	MINIMUM	MAXIMUM
A	.079 [2.00]	.081 [2.06]
B	–	.064 [1.62]
C	.007 [0.18]	–
D	.007 [0.18]	.037 [0.94]
E	.117 [2.97]	–
F	.141 [3.58]	–
G	.141 [3.58]	–

JACK

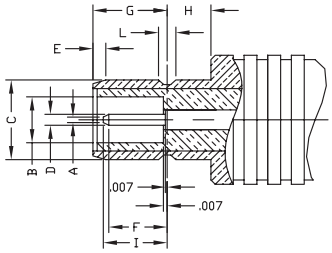

LETTER	INCHES [MILLIMITERS]	
	MINIMUM	MAXIMUM
A	–	.010 [0.25]
B	.082 [2.08]	.085 [2.16]
C	.144 [3.66]	.146 [3.71]
D	.019 [0.48]	.021 [0.53]
E	.000	–
F	.052 [1.32]	–
G	.131 [3.33]	.141 [3.58]
H	.080 [2.03]	–
I	–	.117 [2.97]
J	–	.007 [0.18]
K	–	.007 [0.18]
L	.027 [0.69]	.037 [.94]

NOTE 1: I.D. TO MEET VSWR AND CONTACT RESISTANCE WHEN MATED WITH .019/.021 DIA. PIN

NOTE 2: MUST MEET THE FORCE TO ENGAGE AND DISENGAGE WHEN MATED WITH MATING PART

SPECIFICATIONS

ELECTRICAL SPECIFICATIONS — FLEX CABLE
IMPEDANCE: 50 Ω
WORKING VOLTAGE RATING: 250 VRMS (RG-178)
335 VRMS (RG-316)
FREQUENCY RANGE: 0-4 GHz

MECHANICAL SPECIFICATIONS
MATING: SNAP ON COUPLING
INTERFACE: MIL-STD-348
CABLING: CLAMP, CRIMP, SOLDER

PLATING
N - NICKEL
G - GOLD

DIELECTRIC MATERIAL
T - TEFLON

CABLE GROUPS

GRP	FOR THESE CABLE TYPES
B	TIMES LMR-100A; RG-174, 188, 188A, 316/U; ALPHA 9174, 9316; BELDEN 7805A, 8216, 83269, 83284, 84316; COMMSCOPE AMC-174
B1	RG-316/U DOUBLE SHIELD; RD-316

FOR A MORE EXTENSIVE LISTING OF CABLE GROUPS, PLEASE REFER TO PAGES 131-133.

FIG. 1
RSB-4000-1B, -1B1, -B-03,

FIG. 2
RSB-4000-B1

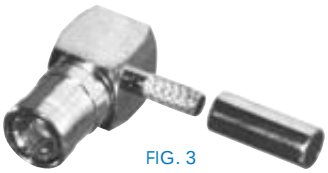

FIG. 3
RSB-4010-1B, -1B1, -B, -B1

PHOTOS FOR REFERENCE ONLY, SHOWN AT 150% ACTUAL SIZE.

FOR MOUNTING CONFIGURATIONS REFER TO PAGES 137-151

PART #	FIG	DESCRIPTION	CBL GRP	NOTES	PLATING			RECOM-MENDED TOOL
					BDY	P/C	DIE	
RSB-4000-1B	1	CRIMP PLUG	B	FOR RG-174/U	G	G	T	RFA-4009-204
RSB-4000-1B1	1	CRIMP PLUG	B1	FOR RG-316/U DOUBLE SHIELD	G	G	T	RFA-4009-204
RSB-4000-B-03	1	CRIMP PLUG	B	FOR RG-174/U, STANDARD GRIP	N	G	T	RFA-4009-204
RSB-4000-B1	2	CRIMP PLUG	B1	FOR RG-316/U DOUBLE SHIELD, CONTOUR GRIP	N	G	T	RFA-4009-204
RSB-4010-1B	3	RIGHT ANGLE CRIMP PLUG	B	FOR RG-174/U	G	G	T	RFA-4009-204
RSB-4010-1B1	3	RIGHT ANGLE CRIMP PLUG	B1	FOR RG-316/U DOUBLE SHIELD	G	G	T	RFA-4009-204
RSB-4010-B	3	RIGHT ANGLE CRIMP PLUG	B	FOR RG-174/U	N	G	T	RFA-4009-204
RSB-4010-B1	3	RIGHT ANGLE CRIMP PLUG	B1	FOR RG-316/U DOUBLE SHIELD	N	G	T	RFA-4009-204

SMB - 50 OHM — continued

FIG. 4
RSB-4050-1B, -1B1, -B, -B1

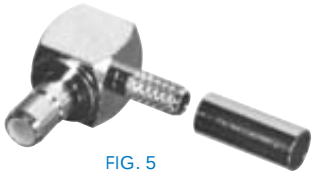

FIG. 5
RSB-4055-1B, -1B1

FIG. 6
RSB-4100-B

FIG. 7
RSB-4252-1B, -1B1, -B, -B1

FIG. 8
RSB-4300, -1

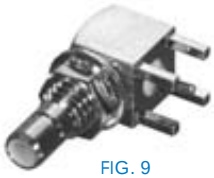

FIG. 9
RSB-4301-1

FIG. 10
RSB-4350, -1

FIG. 11
RSB-4350-1-75

FIG. 12
RSB-4400-1

PHOTOS FOR REFERENCE ONLY, SHOWN AT 150% ACTUAL SIZE.

FOR MOUNTING CONFIGURATIONS REFER TO PAGES 137-151

PART #	FIG	DESCRIPTION	CBL GRP	NOTES	PLATING			RECOM-MENDED TOOL
					BDY	P/C	DIE	
RSB-4050-1B	4	CRIMP JACK	B	FOR RG-174/U	G	G	T	RFA-4009-204
RSB-4050-1B1	4	CRIMP JACK	B1	FOR RG-316/U DOUBLE SHIELD	G	G	T	RFA-4009-204
RSB-4050-B	4	CRIMP JACK	B	FOR RG-174/U	N	G	T	RFA-4009-204
RSB-4050-B1	4	CRIMP JACK	B1	FOR RG-316/U DOUBLE SHIELD	N	G	T	RFA-4009-204
RSB-4055-1B	5	RIGHT ANGLE CRIMP JACK	B	FOR RG-174/U	G	G	T	RFA-4009-204
RSB-4055-1B1	5	RIGHT ANGLE CRIMP JACK	B1	FOR RG-316/U DOUBLE SHIELD	G	G	T	RFA-4009-204
RSB-4100-B	6	CLAMP PLUG	B	FOR RG-174/U	N	G	T	RFA-4009-204
RSB-4252-B	7	BULKHEAD CRIMP JACK	B	FOR RG-174/U	N	G	T	RFA-4009-204
RSB-4252-1B	7	BULKHEAD CRIMP JACK	B	FOR RG-174/U	G	G	T	RFA-4009-204
RSB-4252-1B1	7	BULKHEAD CRIMP JACK	B1	FOR RG-316/U DOUBLE SHIELD	G	G	T	RFA-4009-204
RSB-4252-B1	7	BULKHEAD CRIMP JACK	B1	FOR RG-316/U DOUBLE SHIELD	N	G	T	RFA-4009-204
RSB-4300	8	RIGHT ANGLE JACK PCB MOUNT		4 LEG	N	G	T	
RSB-4300-1	8	RIGHT ANGLE JACK PCB MOUNT		4 LEG	G	G	T	
RSB-4301-1	9	RIGHT ANGLE JACK BULKHEAD PCB MOUNT		4 LEG	G	G	T	
RSB-4350	10	VERTICAL JACK PCB MOUNT		4 LEG	N	G	T	
RSB-4350-1	10	VERTICAL JACK PCB MOUNT		4 LEG	G	G	T	
RSB-4350-1-75	11	VERTICAL JACK PCB MOUNT		4 LEG	G	G	T	
RSB-4400-1	12	RIGHT ANGLE PLUG PCB MOUNT		4 LEG	G	G	T	

For more information or custom products call us or go to our website. See cover for contact information.

SMZ 75 Ohm (TYPE 43)

PLUG

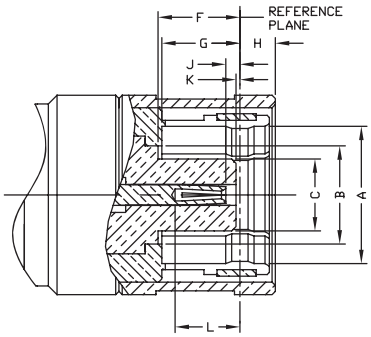

LETTER	INCHES [MILLIMITERS]	
	MINIMUM	MAXIMUM
A	.246 [6.25]	–
B	.220 [5.59] NOMINAL	
C	–	.131 [3.33]
F	.141 [3.58]	–
G	.141 [3.58]	–
H	–	.093 [2.36]
J	.007 [0.18]	–
K	.007 [0.18]	.037 [0.94]
L	.117 [2.97]	–

JACK

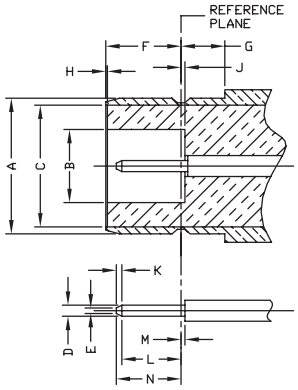

LETTER	INCHES [MILLIMITERS]	
	MINIMUM	MAXIMUM
A	.244 [6.20]	.246 [6.25]
B	.132 [3.35]	–
C	.220 [5.59] NOMINAL	
D	.019 [0.48]	.021 [0.53]
E	–	.010 [0.25]
F	.131 [3.33]	.141 [3.58]
G	.079 [2.01]	–
H	000	–
J	–	.007 [0.18]
K	.010 [0.25]	–
L	.052 [1.32]	–
M	–	.007 [0.18]
N	–	.117 [2.97]

SPECIFICATIONS

ELECTRICAL SPECIFICATIONS
IMPEDANCE: 75 Ω
WORKING VOLTAGE RATING: 500 VRMS @ SEA LEVEL (DEPENDENT ON CABLE)
FREQUENCY RANGE: 0-3 GHz

MECHANICAL SPECIFICATIONS
MATING: SNAP ON COUPLING, POSI-LOCK
INTERFACE: MIL-STD-348
CABLING: CRIMP FOR RG-179/U ONLY

PLATING
G - GOLD
N - NICKEL

DIELECTRIC MATERIAL
T - TEFLON

FIG. 1
RSB-300-1-179

FIG. 2
RSB-301-179

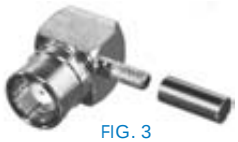

FIG. 3
RSB-310-1-179

FIG. 4
RSB-350-1

FIG. 5
RSB-355-1

PHOTOS FOR REFERENCE ONLY, SHOWN AT 100% ACTUAL SIZE.

FOR MOUNTING CONFIGURATIONS REFER TO PAGES 137-151

PART #	FIG	DESCRIPTION	NOTES AND CABLE GROUPS	PLATING			RECOMMENDED TOOL
				BDY	P/C	DIE	
RSB-300-1-179	1	CRIMP PLUG	FOR RG-179/U ONLY	G	G	T	RFA-4009-204
RSB-301-179	2	CRIMP PLUG	WITH POSI-LOCK SHELL, FOR RG-179/U ONLY	N	G	T	RFA-4009-204
RSB-310-1-179	3	RIGHT ANGLE CRIMP PLUG	FOR RG-179/U ONLY	G	G	T	RFA-4009-204
RSB-350-1	4	VERTICAL PCB MOUNT JACK		G	G	T	
RSB-355-1	5	RIGHT ANGLE PCB MOUNT JACK		G	G	T	

Mini-SMB 75 Ohm

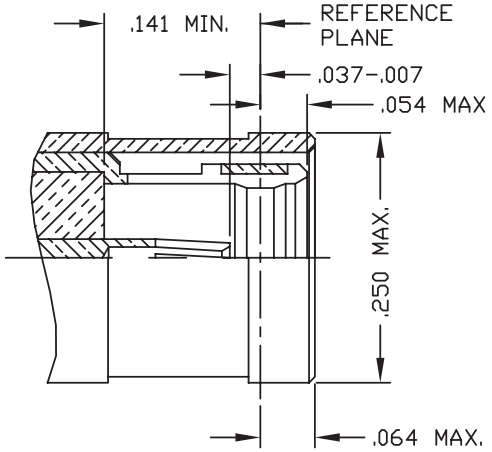

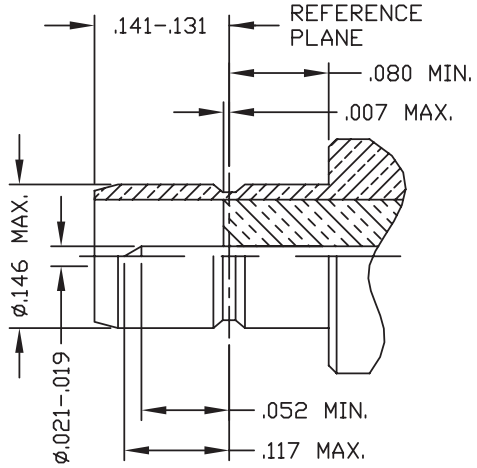

SPECIFICATIONS

ELECTRICAL SPECIFICATIONS
IMPEDANCE: 75 Ω
WORKING VOLTAGE RATING: 335 VRMS @ SEA LEVEL (DEPENDENT ON CABLE)
FREQUENCY RANGE: 0-4 GHz

MECHANICAL SPECIFICATIONS
MATING: SNAP LOCK
INTERFACE: MIL-STD-348
CABLING: CRIMP, PCB SOLDER

PLATING
G - GOLD

DIELECTRIC MATERIAL
T - TEFLON

FIG. 1
RSB-200-1-179

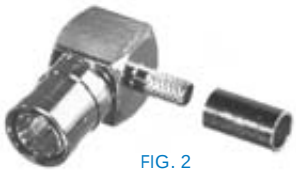
FIG. 2
RSB-210-1-179, 1-SI

FIG. 3
RSB-220-1-179, 1-SI

FIG. 4
RSB-221-1-179

FIG. 5
RSB-250-1

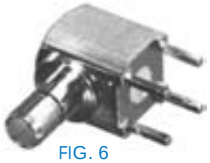
FIG. 6
RSB-255-1

FIG. 7
RSB-260-1

FIG. 8
RSB-265-1

PHOTOS FOR REFERENCE ONLY, SHOWN AT 150% ACTUAL SIZE.

FOR MOUNTING CONFIGURATIONS REFER TO PAGES 137-151

PART #	FIG	DESCRIPTION	CABLE GROUPS	PLATING			RECOMMENDED TOOL
				BDY	P/C	DIE	
RSB-200-1-179	1	CRIMP PLUG	FOR RG-179/U ONLY	G	G	T	RFA-4009-204
RSB-200-1S1	2	CRIMP PLUG	FOR RG-179/U DOUBLE SHIELD	G	G	T	RFA-4009-204
RSB-210-1-179	2	RIGHT ANGLE CRIMP PLUG	FOR RG-179/U ONLY	G	G	T	RFA-4009-204
RSB-210-1-S1	3	RIGHT ANGLE CRIMP PLUG	FOR RG-179/U DOUBLE SHIELD	G	G	T	RFA-4009-204
RSB-220-1-179	3	CRIMP JACK	FOR RG-179/U ONLY	G	G	T	RFA-4009-204
RSB-221-1-179	4	BULKHEAD CRIMP JACK	FOR RG-179/U ONLY	G	G	T	RFA-4009-204
RSB-250-1	5	VERTICAL JACK PCB MOUNT		G	G	T	
RSB-255-1	6	RIGHT ANGLE JACK PCB MOUNT		G	G	T	
RSB-260-1	7	VERTICAL PLUG PCB MOUNT		G	G	T	
RSB-265-1	8	RIGHT ANGLE PLUG PCB MOUNT		G	G	T	

For more information or custom products call us or go to our website. See cover for contact information.

PLUG

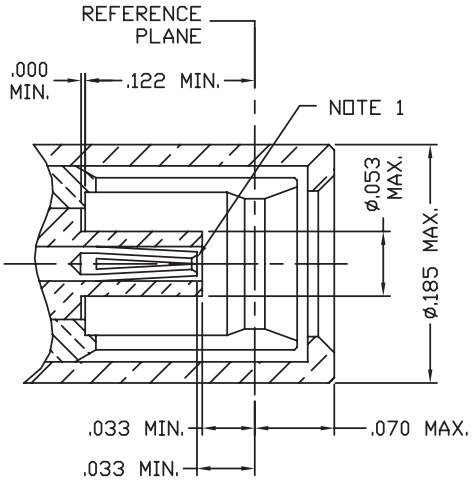

NOTE 1: I.D. TO MEET VSWR AND CONTACT RESISTANCE WHEN MATED WITH .015/.014 DIA. PIN

JACK

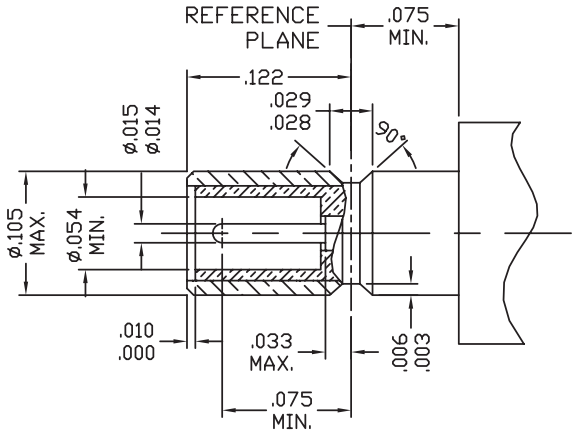

SPECIFICATIONS

ELECTRICAL SPECIFICATIONS
IMPEDANCE: 50 Ω
WORKING VOLTAGE RATING: 250 VRMS @ SEA LEVEL
FREQUENCY RANGE: 0-12.4 GHz

MECHANICAL SPECIFICATIONS
MATING: FORCE TO ENGAGE
INTERFACE: MIL-STD-348
CABLING: CRIMP AND SOLDER

PLATING
G - GOLD

DIELECTRIC MATERIAL
T - TEFLON

CABLE GROUPS

GRP	FOR THESE CABLE TYPES
B	TIMES LMR-100A; RG-174, 188, 188A, 316/U; ALPHA 9174, 9316; BELDEN 7805A, 8216, 83269, 83284, 84316; COMMSCOPE AMC-174
B1	RG-316/U DOUBLE SHIELD; RD-316
S	RG-161, 179, 179A, 187, 187A/U; BELDEN 1520A, 1521A, 1522A, 9221; COMMSCOPE 15-55340

FOR A MORE EXTENSIVE LISTING OF CABLE GROUPS, PLEASE REFER TO PAGES 131-133.

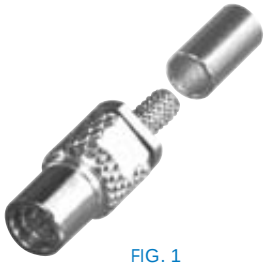

FIG. 1
RSB-700-179-1

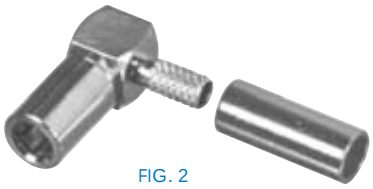

FIG. 2
RSB-710-1B

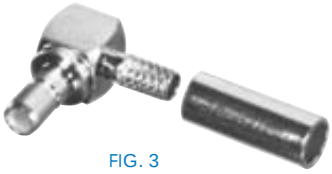

FIG. 3
RSB-750-1B, -1B1

PHOTOS FOR REFERENCE ONLY, SHOWN AT 150% ACTUAL SIZE.

FOR MOUNTING CONFIGURATIONS REFER TO PAGES 137-151

PART #	FIG	DESCRIPTION	CBL GRP	NOTES	PLATING			RECOM-MENDED TOOL
					BDY	P/C	DIE	
RSB-700-179-1	1	CRIMP PLUG	S	FOR RG-179/U	G	G	T	RFA-4009-204
RSB-710-1B	2	PLUG, RIGHT ANGLE CRIMP	B	FOR RG-316/U	G	G	T	RFA-4009-204
RSB-750-1B	3	JACK, RIGHT ANGLE CRIMP	B	FOR RG-316/U	G	G	T	RFA-4009-204
RSB-750-1B1	3	JACK, RIGHT ANGLE CRIMP	B1	FOR RG-316/U DOUBLE SHIELD	G	G	T	RFA-4009-204

TNC — 50 Ohm

Find Reverse Polarity and Reverse Thread on page 51-56

TNC 50 Ohm

MALE

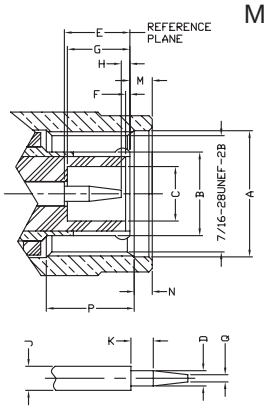

LETTER	INCHES [MILLIMITERS]	
	MINIMUM	MAXIMUM
A	.440 [11.18]	–
B	FLARED TO MEET ELECTRICAL & MECHANICAL REQUIREMENTS	
C	.190 [4.83]	–
D	.052 [1.32]	.054 [1.37]
E	.210 [5.33]	.230 [5.84]
F	.006 [.15]	.018 [.46]
G	.208 [5.28]	.228 [5.79]
H	.003 [.08]	.040 [1.02]
J	.081 [2.06]	.087 [2.21]
K	.078 [1.98]	–
M	–	.078 [1.98]
N	.063 [1.60]	–
P	.156 [3.96]	–
Q	–	.025 [.64]

FEMALE

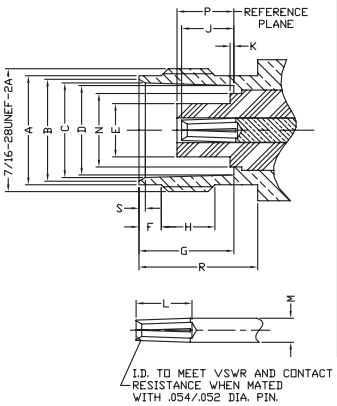

LETTER	INCHES [MILLIMITERS]	
	MINIMUM	MAXIMUM
A	.378 [9.60]	.382 [9.70]
B	.346 [8.79]	.356 [9.04]
C	.327 [8.31]	.333 [8.46]
D	.319 [8.10]	.321 [8.15]
E	–	.186 [4.72]
F	.068 [1.73]	.088 [2.24]
G	.327 [8.31]	.335 [8.51]
H	.187 [4.75]	–
J	.186 [4.72]	.206 [5.23]
K	–	.006 [.15]
L	.195 [4.95]	–
M	.081 [2.06]	.087 [2.21]
N	–	.256 [6.50]
P	.188 [4.78]	.208 [5.28]
R	.414 [10.52]	–
S	.015 [.38]	.030 [.76]

SPECIFICATIONS

ELECTRICAL SPECIFICATIONS
IMPEDANCE: 50 Ω
WORKING VOLTAGE RATING: 500 VRMS
FREQUENCY RANGE: 0-7 GHz & 11 GHz

MECHANICAL SPECIFICATIONS
MATING: 7-16—28 THREADED COUPLING
INTERFACE: MIL-STD-348, SECTION 313
CABLING: CLAMP, SOLDER, CRIMP AND TWIST-ON

PLATING
C - BLACK CROME
G - GOLD
N - NICKEL
S - SILVER
TP- THERMOPLASTIC

DIELECTRIC MATERIAL
D - DELRIN
PP - POLYPROPYLENE
T - TEFLON

CABLE GROUPS

GRP	FOR THESE CABLE TYPES
B	TIMES LMR-100A; RG-174, 188, 188A, 316/U; ALPHA 9174, 9316; BELDEN 7805A, 8216, 83269, 83284, 84316; COMMSCOPE AMC-174
B1	RG-316/U DOUBLE SHIELD; RD-316
C	TIMES LMR-195; RG-58, 58A, 58C, 141, 141A/U; ANDREW CNT-195, CNT-195-DB, CNT-195-FR; BELDEN 8219, 8240, 8259, 8262, 9201, 9203, 9310, 9311; COMMSCOPE WBC-195, WBC-195R, 0268, TCOM-195, TCOM-195-FR; HARBOUR HPF195
C1	RG-55, 55A, 55B, 142, 142A, 142B, 223, 400/U; ALPHA 9055, 9055B, 9223; BELDEN 7806A, 83242, 84142
C2	TIMES LMR-200, MSI-22; ALPHA 9848; BELDEN 7807A; COMMSCOPE AMC-58, WBC-200, WBC-200R, TCOM-200, TCOM-200-FR; HARBOUR HPF200
I	TIMES AA-5886, AA-6146, LMR-400, LMR-400 ULTRAFLEX; ANDREW CNT-400, CNT-400AL, CNT-400-DB, CNT-400-FR, CNT-400-FRP; BELDEN 7810A, 8214, 9913; COMMSCOPE TCOM-400, TCOM-400-FR, TCOM-400-PUR, WBC-400, WBC-400R, CUSHCRAFT ULTRALINK TL93605; HARBOUR HPF400
M	TIMES MSI-15; RG-122/U; BELDEN 82907, 88240, 89907; MOTOROLA WHITE TEFLON
P	TIMES AA-3096; ANTENNA SPECIALIST K214, PRO-FLEX 800
X	TIMES LMR-240, LMR-240 ULTRAFLEX; RG-8X; ANDREW CNT-240, CNT-240AL, CNT-240ALS, CNT-240-DB, CNT-240-FR, CNT-240-W; BELDEN 9258; COMMSCOPE TCOM-240, TCOM-240-FR, WBC-240, WBC-240R; HARBOUR HPF240; MICRO 8/U; REMEE 1600; SAXTON 8315

FOR A MORE EXTENSIVE LISTING OF CABLE GROUPS, PLEASE REFER TO PAGES 131-139.

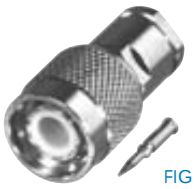

FIG. 1
RFT-1200, -C2,
RFT-1201-1P, -1X

FIG. 2
RFT-1201-03

FIG. 3
RFT-1201-SI

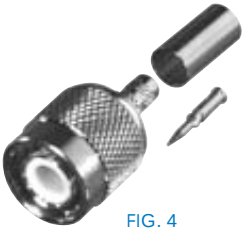

FIG. 4
RFT-1202-2, -2T,
-2TC1, -C1, -C2, -C2T

FIG. 5
RFT-1202-2B

Strain reliefs for RG-58/U — available separately
PT-4015-03-BK (black), PT-4015-03-BL (blue)

FIG. 6
RFT-1202-5

FIG. 7
RFT-1202-3, -3B1

FIG. 8
RFT-1202-7, -7T

FIG. 9
RFT-1202-I

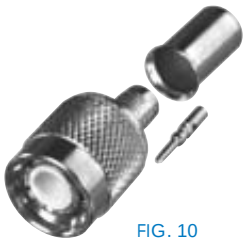

FIG. 10
RFT-1203-1P, -1X

FIG. 11
RFT-1204

FIG. 12
RFT-1206

FIG. 13
RFT-1208

PHOTOS FOR REFERENCE ONLY, SHOWN AT 100% ACTUAL SIZE.

FOR MOUNTING CONFIGURATIONS REFER TO PAGES 137-151

PART #	FIG	DESCRIPTION	CBL GRP	NOTES	REPLACES OR EQUIVALENT TO	PLATING			RECOM-MENDED TOOL
						BDY	P/C	DIE	
RFT-1200	1	MALE CLAMP	C, C1	FOR RG-58/U & RG-142/U	MS39012/26-0101	N	G	T	RFA-4009-206
RFT-1200-C2	1	MALE CLAMP	C2	FOR TIMES LMR-200		N	G	T	RFA-4009-206
RFT-1201-03	2	MALE CLAMP	--	FOR FUJIKURA 5D-FB CABLE		N	G	T	
RFT-1201-1P	1	MALE CLAMP	P	FOR PROFLEX	MS39012/26-0102	N	G	T	RFA-4009-203
RFT-1201-1X	1	MALE CLAMP	X	FOR RG-8/X & TIMES LMR-240		N	G	T	RFA-4009-203
RFT-1201-SI	3	MALE CLAMP	I	FOR BELDEN 9913 & TIMES LMR-400		S	G	T	RFA-4005-300
RFT-1202-2	4	MALE CRIMP	C	FOR RG-58/U	MS39012/26-0011	N	G	D	RFA-4009-206
RFT-1202-2B	5	MALE CRIMP	C	FOR RG-58/U, BLACK	MS39012/26-0011	C	G	D	RFA-4009-206
RFT-1202-2T	4	MALE CRIMP	C	FOR RG-58/U	MS39012/26-0011	N	G	T	RFA-4009-206
RFT-1202-2TC1	4	MALE CRIMP	C1	FOR RG-142/U	MS39012/26-0011	N	G	T	RFA-4009-206
RFT-1202-3	7	MALE CRIMP	B	FOR RG-174/U		N	G	T	RFA-4009-204
RFT-1202-3B1	7	MALE CRIMP	B1	FOR RG-316/U DOUBLE SHIELD		N	G	T	RFA-4009-204
RFT-1202-5	6	MALE CRIMP	C	QUICK DISCONNECT, FOR RG-58/U		N	G	D	RFA-4009-206
RFT-1202-7	8	MALE CRIMP	C3, M	FOR MOTOROLA WHITE TEFLON OR BELDEN 89907		N	G	D	RFA-4009-206
RFT-1202-7T	8	MALE CRIMP	C3, M	FOR MOTOROLA WHITE TEFLON OR BELDEN 89907		N	G	T	RFA-4009-206
RFT-1202-C1	4	MALE CRIMP	C1	FOR RG-142/U		N	G	D	RFA-4009-206
RFT-1202-C2	4	MALE CRIMP	C2	FOR TIMES LMR-200		N	G	D	RFA-4009-206
RFT-1202-C2T	4	MALE CRIMP	C2	FOR TIMES LMR-200		N	G	T	RFA-4009-206
RFT-1202-I	9	MALE CRIMP	I	FOR BELDEN 9913 & TIMES LMR-400		N	G	T	RFA-4009-205
RFT-1203-1P	10	MALE CRIMP	P	FOR PROFLEX		N	G	D	RFA-4009-203
RFT-1203-1X	10	MALE CRIMP	X	FOR RG-8/X & TIMES LMR-240		N	G	D	RFA-4009-203
RFT-1204	11	MALE SOLDERLESS	C	FOR RG-58/U		N	S	D	RFA-4009-206
RFT-1206	12	MALE TWIST-ON	C	FOR RG-58/U	AMP 221983-7	N	S	D	
RFT-1208	13	FEMALE RIGHT ANGLE PCB MOUNT		WITH TRIPLE D-FLAT, DIECAST ZINC		N	G	PP	

TNC 50 OHM CONNECTORS AND IN-SERIES ADAPTERS — continued

FIG. 14
RFT-1209-1B

FIG. 15
RFT-1209-B

FIG. 16
RFT-1209-W, -05

FIG. 17
RFT-1210, -15

FIG. 18
RFT-1210-03

FIG. 19
RFT-1211-1, -1-03

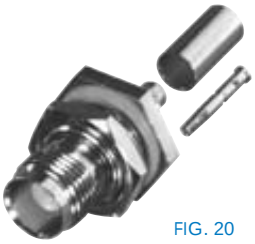

FIG. 20
RFT-1212, -C1, -C2,
RFT-1213-P, -X

FIG. 21
RFT-1212-B, -B1

PHOTOS FOR REFERENCE ONLY, SHOWN AT 100% ACTUAL SIZE.

FOR MOUNTING CONFIGURATIONS REFER TO PAGES 137-151

PART #	FIG	DESCRIPTION	CBL GRP	NOTES	REPLACES OR EQUIVALENT TO	PLATING			RECOM-MENDED TOOL
						BDY	P/C	DIE	
RFT-1209-1B	14	FEMALE VERTICAL LOW PROFILE PCB MOUNT		WITH D-FLAT & POST LEGS, BLACK, W/HARDWARE		TP	G	PP	
RFT-1209-B	15	FEMALE R/A LOW PROFILE PCB MOUNT		WITH D-FLAT & POST LEGS, BLACK		TP	G	PP	
RFT-1209-W	16	FEMALE R/A LOW PROFILE PCB MOUNT		WITH D-FLAT & POST LEGS, WHITE		TP	G	PP	
RFT-1209-W-05	16	FEMALE R/A LOW PROFILE PCB MOUNT		WITH D-FLAT & SNAP LEGS, WHITE, NO HARDWARE		TP	G	PP	
RFT-1210	17	FEMALE CHASSIS		4 HOLE FLANGE MOUNT WITH SOLDER CUP	MS39012/32-0001	N	G	T	
RFT-1210-03	18	FEMALE CHASSIS		2 HOLE FLANGE MOUNT WITH SOLDER CUP		N	G	T	
RFT-1210-15	17	FEMALE CHASSIS		4 HOLE FLANGE MOUNT WITH SOLDER CUP, BECU CONTACT AND 3-56 UNF TAPPED HOLES		N	G	T	
RFT-1211-1	19	FEMALE BULKHEAD		FRONT MOUNT WITH D-FLAT AND SOLDER CUP	MS39012/31-0001	N	G	T	
RFT-1211-1-03	19	FEMALE BULKHEAD		FRONT MOUNT WITH D-FLAT & BERYLLIUM COPPER CONTACT	MS39012/31-0001	N	G	T	
RFT-1212	20	FEMALE CRIMP BULKHEAD	C	REAR MOUNT WITH D-FLAT & O-RING, FOR RG-58/U	MS39012/23329/4-14	N	G	D	RFA-4009-206
RFT-1212-B	21	FEMALE CRIMP BULKHEAD	B	REAR MOUNT WITH D-FLAT & O-RING, FOR RG-174/U		N	G	D	RFA-4009-204
RFT-1212-B1	21	FEMALE CRIMP BULKHEAD	B1	REAR MOUNT WITH D-FLAT & O-RING, FOR RG-316/U DOUBLE SHIELD		N	G	D	RFA-4009-204
RFT-1212-C1	20	FEMALE CRIMP BULKHEAD	C1	REAR MOUNT WITH D-FLAT & O-RING, FOR RG-142		N	G	D	RFA-4009-206
RFT-1212-C2	20	FEMALE CRIMP BULKHEAD	C2	REAR MOUNT WITH D-FLAT & O-RING, FOR TIMES LMR-200		N	G	D	RFA-4009-206
RFT-1213-P	20	FEMALE CRIMP BULKHEAD	P	REAR MOUNT WITH D-FLAT & O-RING, FOR PROFLEX		N	S	D	RFA-4009-203
RFT-1213-X	20	FEMALE CRIMP BULKHEAD	X	REAR MOUNT WITH D-FLAT & O-RING, FOR RG-8/X & TIMES LMR-240		N	G	D	RFA-4009-203

For more information or custom products call us or go to our website. See cover for contact information.

FIG. 22
RFT-1214-I

FIG. 23
RFT-1216-1, -C1, -C2, -I,
RFT-1217-P, -X

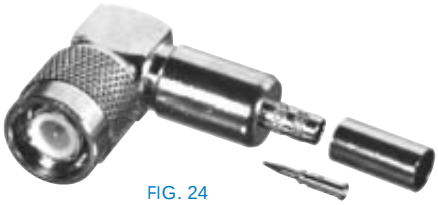

FIG. 24
RFT-1218, -C1, -C2

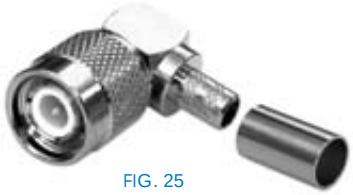

FIG. 25
RFT-1218-X

FIG. 26
RFT-1224

FIG. 27
RFT-1225

FIG. 28
RFT-1226

FIG. 29
RFT-1227

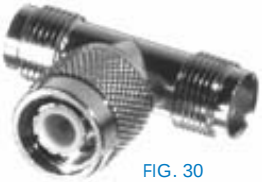

FIG. 30
RFT-1228

FIG. 31
RFT-1229

FIG. 32
RFT-1242

PHOTOS FOR REFERENCE ONLY, SHOWN AT 100% ACTUAL SIZE.

FOR MOUNTING CONFIGURATIONS REFER TO PAGES 137-151

PART #	FIG	DESCRIPTION	CBL GRP	NOTES	REPLACES OR EQUIVALENT TO	PLATING			RECOM-MENDED TOOL
						BDY	P/C	DIE	
RFT-1214-I	22	FEMALE CLAMP	I	FOR BELDEN 9913 & TIMES LMR-400		N	G	T	RFA-4009-205
RFT-1216-1	23	FEMALE CRIMP	C	FOR RG-58/U	MS39012/27-0504	N	G	T	RFA-4009-206
RFT-1216-C1	23	FEMALE CRIMP	C1	FOR RG-142/U		N	G	T	RFA-4009-206
RFT-1216-C2	23	FEMALE CRIMP	C2	FOR TIMES LMR-200		N	G	T	RFA-4009-206
RFT-1216-I	23	FEMALE CRIMP	I	FOR BELDEN 9913 & TIMES LMR-400		N	G	T	RFA-4009-205
RFT-1217-P	23	FEMALE CRIMP	P	FOR PROFLEX		N	G	D	RFA-4009-203
RFT-1217-X	23	FEMALE CRIMP	X	FOR RG-8/X & TIMES LMR-240		N	G	D	RFA-4009-203
RFT-1218	24	MALE RIGHT ANGLE CRIMP	C	FOR RG-58/U	MS39012/30-0504	N	G	T	RFA-4009-206
RFT-1218-C1	24	MALE RIGHT ANGLE CRIMP	C1	FOR RG-142/U		N	G	T	RFA-4009-206
RFT-1218-C2	24	MALE RIGHT ANGLE CRIMP	C2	FOR TIMES LMR-200		N	G	T	RFA-4009-206
RFT-1218-X	25	MALE RIGHT ANGLE CRIMP	X	FOR RG-8/X & TIMES LMR-240		N	G	T	RFA-4009-203
RFT-1224	26	BARREL ADAPTER		TNC MALE TO TNC MALE		N	G	T	
RFT-1225	27	BARREL ADAPTER		TNC FEMALE TO TNC FEMALE	AMP 221325-1, AMPH. 31-4791 MS39012/33-00001	N	G	T	
RFT-1226	28	BULKHEAD ADAPTER		TNC FEMALE TO TNC FEMALE WITH O-RING	AMP 221500-1 MS39012/34-00001	N	G	T	
RFT-1227	29	RIGHT ANGLE ADAPTER		TNC FEMALE TO TNC MALE	MS39012/32-00001	N	G	T	
RFT-1228	30	T-ADAPTER		TNC MALE TO TNC DOUBLE FEMALE	MS39012/35-00001	N	G	T	
RFT-1229	31	T-ADAPTER		TNC TRIPLE FEMALE		N	G	T	
RFT-1242	32	ADAPTER		TNC MALE (QUICK DISCONNECT) TO TNC FEMALE		N	G	T	

TNC — 75 Ohm

MALE

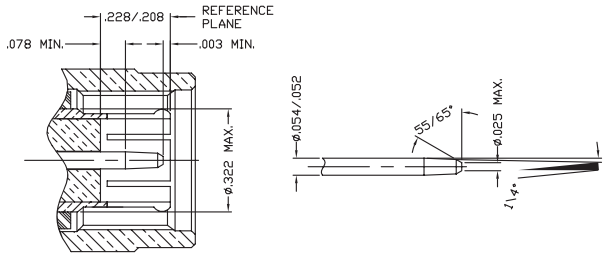

FEMALE

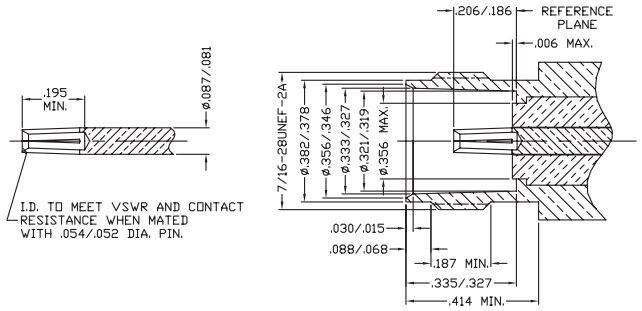

SPECIFICATIONS

ELECTRICAL SPECIFICATIONS
IMPEDANCE: 75 Ω
WORKING VOLTAGE RATING: 500 VRMS
FREQUENCY RANGE: 0-1 GHz

MECHANICAL SPECIFICATIONS
MATING: 7-16 TO 28 THREADED COUPLING
INTERFACE: MIL-STD-348, AS APPLICABLE
CABLING: CLAMP, SOLDER, CRIMP AND TWIST-ON

PLATING
G - GOLD
N - NICKEL
S - SILVER

DIELECTRIC MATERIAL
D - DELRIN
T - TEFLON

CABLE GROUPS

GRP	FOR THESE CABLE TYPES
D	RG-59, 59A, 59B, 62, 62A, 62C/U; ALPHA 9059, 9062, 9830, 9840, 9845; BELDEN 7807A, 8221, 8241, 9169, 9204, 9228; CANARE LV-61S; COMMSCOPE 5555, 5560, 5563; HARBOUR HPF200
R	RG-11/U TYPE; BELDEN 8213, 8238, 8261, 9011, 9292; COMMSCOPE 3247, 5901, 5903, 5908, 5909, 5916, 5916R, 5918

FOR A MORE EXTENSIVE LISTING OF CABLE GROUPS, PLEASE REFER TO PAGES 131-133.

FIG. 1
RFT-1801

FIG. 2
RFT-1803-1, -R

FIG. 3
RFT-1805

FIG. 4
RFT-1813

PHOTOS FOR REFERENCE ONLY, SHOWN AT 100% ACTUAL SIZE.

FOR MOUNTING CONFIGURATIONS REFER TO PAGES 137-151

PART #	FIG	DESCRIPTION	CBL GRP	NOTES	REPLACES OR EQUIVALENT TO	PLATING			RECOM-MENDED TOOL
						BDY	P/C	DIE	
RFT-1801	1	MALE CLAMP	D	FOR RG-59/U		N	S	T	
RFT-1803-1	2	MALE CRIMP	D	FOR RG-59/U	MS39012/26-0012	N	G	D	RFA-4009-203
RFT-1803-R	2	MALE CRIMP	R	FOR RG-11/U		N	G	T	RFA-4005
RFT-1805	3	MALE SOLDERLESS CLAMP	D	FOR RG-59/U	AMPH. 31-5061	N	S	D	
RFT-1813	4	FEMALE CRIMP BULKHEAD	D	REAR MOUNT W/ D FLAT & O-RING, FOR RG-59/U	MS39012/28-0012	N	G	D	RFA-4009-203

For more information or custom products call us or go to our website. See cover for contact information.

MALE

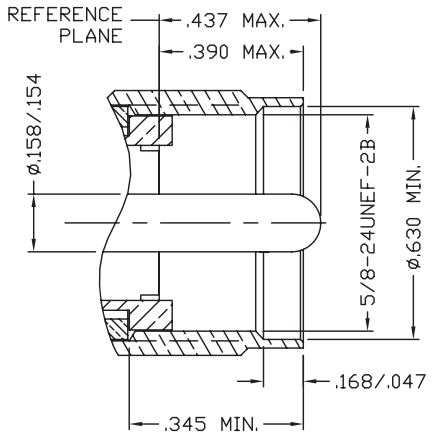

FEMALE

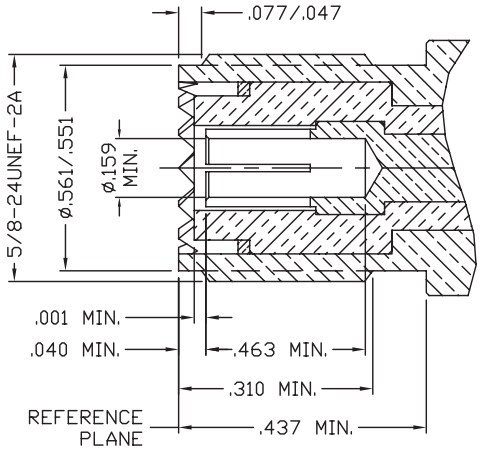

SPECIFICATIONS

ELECTRICAL SPECIFICATIONS
IMPEDANCE: NON-CONSTANT
WORKING VOLTAGE RATING: 500 VRMS
FREQUENCY RANGE: 0-300 MHz

MECHANICAL SPECIFICATIONS
MATING: 5/8 - 24 THREADED COUPLING
INTERFACE: IEC-169-12
CABLING: CLAMP, CRIMP AND PUSH-ON

PLATING
G - GOLD
N - NICKEL
S - SILVER
TP - THERMOPLASTICS

DIELECTRIC MATERIAL
B - BAKELITE, DAP
D - DELRIN
T - TEFLON

CABLE GROUPS

GRP	FOR THESE CABLE TYPES
C	TIMES LMR-195; RG-58, 58A, 58C, 141, 141A/U; ANDREW CNT-195, CNT-195-DB, CNT-195-FR; BELDEN 8219, 8240, 8259, 8262, 9201, 9203, 9310, 9311; COMMSCOPE WBC-195, WBC-195R, 0268, TCOM-195, TCOM-195-FR; HARBOUR HPF195
C1	RG-55, 55A, 55B, 142, 142A, 142B, 223, 400/U; ALPHA 9055, 9055B, 9223; BELDEN 7806A, 83242, 84142
C2	TIMES LMR-200, MSI-22; ALPHA 9848; BELDEN 7807A; COMMSCOPE AMC-58, WBC-200, WBC-200R, TCOM-200, TCOM-200-FR; HARBOUR HPF200
D	RG-59, 59A, 59B, 62, 62A, 62C/U; ALPHA 9059, 9062, 9830, 9840, 9845; BELDEN 7807A, 8221, 8241, 9169, 9204, 9228; CANARE LV-61S; COMMSCOPE 5555, 5560, 5563; HARBOUR HPF200
E	TIMES AA-4478; RG-8, 8A, 213/U; ALPHA 9008, 9213; BELDEN 8267, 9251, 9880, 89880; INTERCOMP 4082, 22132
F	RG-9, 9A, 9B, 214/U; ALPHA 9214; BELDEN 8242, 8268
I	TIMES AA-5886, AA-6146, LMR-400, LMR-400 ULTRAFLEX; RG-8/U TYPE; ANDREW CNT-400, CNT-400AL, CNT-400-DB, CNT-400-FR, CNT-400-FRP; BELDEN 7810A, 8214, 9913; COMMSCOPE TCOM-400, TCOM-400-FR, TCOM-400-PUR, WBC-400, WBC-400R, CUSHCRAFT ULTRALINK TL93605; HARBOUR HPF400
P	TIMES AA-3096; ANTENNA SPECIALIST K214, PRO-FLEX 800
PL	BELDEN 89913
X	TIMES LMR-240, LMR-240 ULTRAFLEX; RG-8X; ANDREW CNT-240, CNT-240AL, CNT-240ALS, CNT-240-DB, CNT-240-FR, CNT-240-W; BELDEN 9258; COMMSCOPE TCOM-240, TCOM-240-FR, WBC-240, WBC-240R; HARBOUR HPF240; MICRO 8/U; REMEE 1600; SAXTON 8315

FOR A MORE EXTENSIVE LISTING OF CABLE GROUPS, PLEASE REFER TO PAGES 131-133.

FIG. 1
RFU-500, -C, -D, -501, -C, -D

FIG. 2
RFU-503

FIG. 3
RFU-504

FIG. 4
RFU-505, -C1, -ST, -STC1, RFU-506, RFU-508-P, -X

FIG. 5
RFU-507, -PL, -S, -SI, -ST, -STF, -STF1

FIG. 6
RFU-520, -1E, -C2, -I

FIG. 7
RFU-521, -ST

FIG. 8
RFU-522

FIG. 9
RFU-523, -1, -T

FIG. 10
RFU-524

See following page for details.

PHOTOS FOR REFERENCE ONLY, SHOWN AT 100% ACTUAL SIZE.

FOR MOUNTING CONFIGURATIONS REFER TO PAGES 137-151

PART #	FIG	DESCRIPTION	CBL GRP	NOTES	REPLACES OR EQUIVALENT TO	PLATING				RECOM-MENDED TOOL
						SHL	BDY	P/C	DIE	
RFU-500	1	MALE SOLDER	C, C1, C2, D, E, F, I, P, X	FOR CABLE GROUP C, C1, & C2 USE REDUCER RFU-530 FOR CABLE GROUP D, P, & X, USE RFU-531	PL-259	N	S	S	B	
RFU-500-C	1	MALE SOLDER	C, C1, C2	FOR RG-58/U, RG-142/U & TIMES LMR-200		N	S	S	B	
RFU-500-D	1	MALE SOLDER	D, P, X	FOR RG-59/U, PROFLEX, RG-8/X & LMR-240		N	S	S	B	
RFU-501	1	MALE SOLDER	C, C1, C2, D, E, F, I, P, X	FOR CABLE GROUP C, C1, & C2 USE REDUCER RFU-530-S FOR CABLE GROUP D, P, & X, USE RFU-531-S	PL-259	S	S	S	T	
RFU-501-C	1	MALE SOLDER	C, C1, C2	FOR RG-58/U, RG-142/U & TIMES LMR-200		S	S	S	T	
RFU-501-D	1	MALE SOLDER	D, P, X	FOR RG-59/U, PROFLEX, RG-8/X & LMR-240		S	S	S	T	
RFU-503	2	MALE CLAMP	E, F, I	WATERPROOF WITH SILICON RUBBER O-RINGS / SEALS	PL-259	N	N	S	T	
RFU-504	3	MALE PUSH-ON FERRULE	C, C2	FOR RG-58/U, NO INSTALLATION TOOLS REQUIRED	PL-259	N	N	S	B	RFA-4009-206
RFU-505	4	MALE CRIMP	C, C2	FOR RG-58/U & TIMES LMR-200	AMP 1-226208-3	N	N	S	B	RFA-4009-206
RFU-505-C1	4	MALE CRIMP	C1	FOR RG-142/U		N	N	S	B	RFA-4009-206
RFU-505-ST	4	MALE CRIMP	C, C2	FOR RG-58/U & TIMES LMR-200		S	S	S	T	RFA-4009-206
RFU-505-STC1	4	MALE CRIMP	C1	FOR RG-142/U		S	S	S	T	RFA-4009-206
RFU-506	4	MALE CRIMP	D	FOR RG-59/U	AMP 1-226208-6	N	N	S	B	RFA-4009-203
RFU-507	5	MALE CRIMP	E	FOR RG-8/U		N	N	S	B	RFA-4009-205
RFU-507-PL	5	MALE CRIMP	PL	FOR BELDEN 89913 PLENUM		S	S	S	T	RFA-4005-300
RFU-507-S	5	MALE CRIMP	E	FOR RG-8/U		S	S	S	B	RFA-4009-205
RFU-507-SI	5	MALE CRIMP	I	FOR BELDEN 9913 & TIMES LMR-400		S	S	S	T	RFA-4005-300
RFU-507-ST	5	MALE CRIMP	E	FOR RG-8/U		S	S	S	T	RFA-4009-205
RFU-505-STF1	5	MALE CRIMP	F	FOR RG-214/U		S	S	S	T	RFA-4009-205
RFU-507-STF	5	MALE CRIMP	F	FOR RG-214/U		S	S	S	T	RFA-4009-205
RFU-508-P	4	MALE CRIMP	P	FOR PROFLEX		N	N	S	B	RFA-4009-203
RFU-508-X	4	MALE CRIMP	X	FOR RG-8X & TIMES LMR-240		N	N	S	B	RFA-4009-203
RFU-520	6	FEMALE CLAMP	C, C1	FOR RG-58/U & RG-142/U		-	N	S	T	
RFU-520-1E	6	FEMALE CLAMP	E, F	FOR RG-8/U & RG-214/U		-	N	S	T	
RFU-520-C2	6	FEMALE CLAMP	C2	FOR TIMES LMR-200		-	N	S	T	
RFU-520-I	6	FEMALE CLAMP	I	FOR BELDEN 9913 & TIMES LMR-400		-	N	S	T	
RFU-521	7	FEMALE PANEL MOUNT		4 HOLE FLANGE, DIECAST ZINC	SO-239	-	N	S	B	
RFU-521-ST	7	FEMALE PANEL MOUNT		4 HOLE FLANGE, DIECAST ZINC	SO-239	-	S	G	T	
RFU-522	8	FEMALE PANEL MOUNT		2 HOLE FLANGE, DIECAST ZINC	SO-239-2H	-	N	S	B	
RFU-523	9	FEMALE BULKHEAD		FRONT MOUNT, WITH D-FLAT, DIECAST ZINC	SO-239-FM, SO-239-SH	-	N	S	B	
RFU-523-1	9	FEMALE BULKHEAD		FRONT MOUNT, .5" DIAMETER WITH D-FLAT & NO SOLDER LUG	SO-239-FM	-	N	G	T	
RFU-523-T	9	FEMALE BULKHEAD		FRONT MOUNT, WITH D-FLAT	SO-239-FM	-	N	S	T	
RFU-524	10	FEMALE BULKHEAD		REAR MOUNT, WITH D-FLAT	SO-239-RM	-	N	S	B	

See photos on previous page.

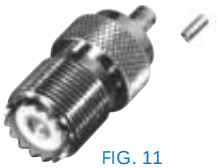

FIG. 11
RFU-527, -T, TC1

FIG. 12
RFU-530, -S,
-531, -1, -S

FIG. 13
RFU-532

FIG. 14
RFU-533

FIG. 15
RFU-534

FIG. 16
RFU-536

FIG. 17
RFU-537, -SO

FIG. 18
RFU-538

FIG. 19
RFU-545

FIG. 20
RFU-551

PHOTOS FOR REFERENCE ONLY, SHOWN AT 75% ACTUAL SIZE.

FOR MOUNTING CONFIGURATIONS REFER TO PAGES 137-151

PART #	FIG	DESCRIPTION	CBL GRP	NOTES		PLATING				RECOM-MENDED TOOL
						SHL	BDY	P/C	DIE	
RFU-527	11	FEMALE CRIMP	C	FOR RG-58/U		-	N	S	D	RFA-4009-206
RFU-527-T	11	FEMALE CRIMP	C	FOR RG-58/U		-	N	S	T	RFA-4009-206
RFU-527-TC1	11	FEMALE CRIMP	C1	FOR RG-142/U		-	N	S	T	RFA-4009-206
RFU-530	12	REDUCER/ADAPTER	C, C1, C2	USE WITH RFN-1001-S, RFU-500 & RFU-501	UG-175/U		N			
RFU-530-S	12	REDUCER/ADAPTER	C, C1, C2	USE WITH RFN-1001-S, RFU-500 & RFU-501	UG-175/U		S			
RFU-531	12	REDUCER/ADAPTER	D, P, X	USE WITH RFN-1001-S, RFU-500 & RFU-501	UG-176/U		N			
RFU-531-1	12	REDUCER/ADAPTER	D, P, X	USE WITH RFN-1001-S, RFU-500 & RFU-501	UG-176/U		N			
RFU-531-S	12	REDUCER/ADAPTER	D, P, X	USE WITH RFN-1001-S, RFU-500 & RFU-501	UG-176/U		S			
RFU-532	13	RIGHT ANGLE ADAPTER		UHF MALE TO UHF FEMALE	UG-646/U		N	S	D	
RFU-533	14	T-ADAPTER		UHF DOUBLE FEMALE TO UHF MALE	M-358		N	S	D	
RFU-534	15	T-ADAPTER		UHF TRIPLE FEMALE			N	S	D	
RFU-536	16	BARREL ADAPTER		UHF FEMALE TO UHF FEMALE	PL-258		N	S	B	
RFU-537	17	BULKHEAD ADAPTER		UHF FEMALE TO UHF FEMALE, WITH HARDWARE	UG-363/U		N	S	D	
RFU-537-SO	17	BARREL ADAPTER		UHF FEMALE TO UHF FEMALE, NO HARDWARE	UG-363/U		N	S	D	
RFU-538	18	BARREL ADAPTER		UHF MALE TO UHF MALE			N	S	T	
RFU-545	19	ADAPTER		UHF FEMALE TO BNC FEMALE			N	S	D	
RFU-551	20	MALE DUMMY LOAD		30 WATT, 300 MHZ		N	TP	S	B	

Mini-UHF

MALE

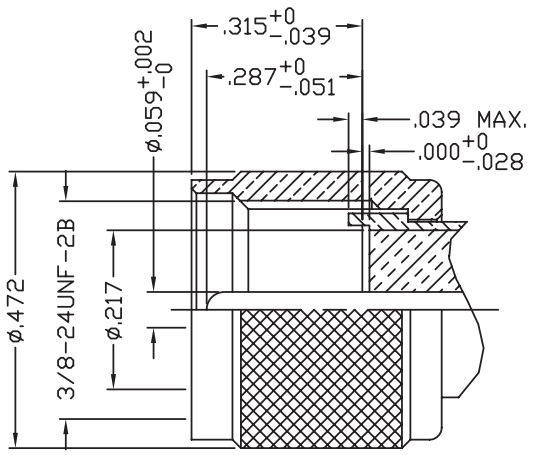

FEMALE

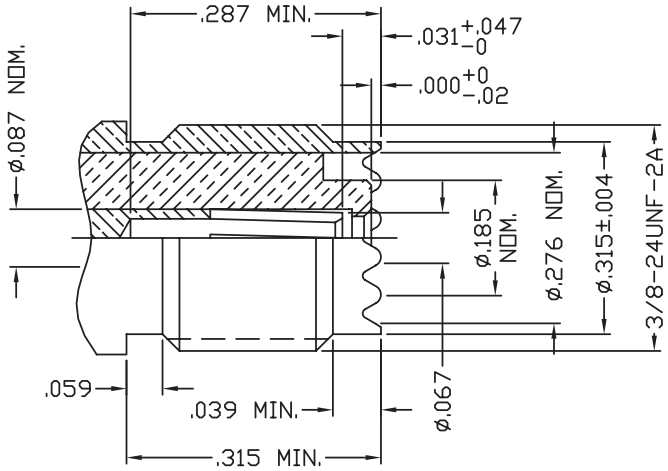

SPECIFICATIONS

ELECTRICAL SPECIFICATIONS
WORKING VOLTAGE RATING: 335 VRMS
IMPEDANCE: 50 Ω (DEPENDENT ON CABLE)
FREQUENCY RANGE: 0-2.5 GHz

MECHANICAL SPECIFICATIONS
MATING: 3/8 - 24 THREADED COUPLING
CABLING: CRIMP AND SOLDER

PLATING
C - BLACK CROME
G - GOLD
N - NICKEL
S - SILVER

DIELECTRIC MATERIAL
B - DAP
D - DELRIN
PP - POLYPROPYLENE
T - TEFLON

CABLE GROUPS

GRP	FOR THESE CABLE TYPES
B	TIMES LMR-100A; RG-174, 188, 188A, 316/U; ALPHA 9174, 9316; BELDEN 7805A, 8216, 83269, 83284, 84316; COMMSCOPE AMC-174
B1	RG-316/U DOUBLE SHIELD; RD-316
C	TIMES LMR-195; RG-58, 58A, 58C, 141, 141A/U; ANDREW CNT-195, CNT-195-DB, CNT-195-FR; BELDEN 8219, 8240, 8259, 8262, 9201, 9203, 9310, 9311; COMMSCOPE WBC-195, WBC-195R, 0268, TCOM-195, TCOM-195-FR; HARBOUR HPF195
C1	RG-55, 55A, 55B, 142, 142A, 142B, 223, 400/U; ALPHA 9055, 9055B, 9223; BELDEN 7806A, 83242, 84142
D	RG-59, 59A, 59B, 62, 62A, 62C/U; ALPHA 9059, 9062, 9830, 9840, 9845; BELDEN 7807A, 8221, 8241, 9169, 9204, 9228; CANARE LV-61S; COMMSCOPE 5555, 5560, 5563; HARBOUR HPF200
M	TIMES MSI-15; RG-122/U; BELDEN 82907, 88240, 89907; MOTOROLA WHITE TEFLON
P	TIMES AA-3096; ANTENNA SPECIALIST K214, PRO-FLEX 800
X	TIMES LMR-240, LMR-240 ULTRAFLEX; RG-8X; ANDREW CNT-240, CNT-240AL, CNT-240ALS, CNT-240-DB, CNT-240-FR, CNT-240-W; BELDEN 9258; COMMSCOPE TCOM-240, TCOM-240-FR, WBC-240, WBC-240R; HARBOUR HPF240; MICRO 8/U; REMEE 1600; SAXTON 8315

FOR A MORE EXTENSIVE LISTING OF CABLE GROUPS, PLEASE REFER TO PAGES 131-133.

FIG. 1
RFU-600

FIG. 2
RFU-600-1

FIG. 3
RFU-600-1P

FIG. 4
RFU-600-10C,
-10C-03, -10C1

FIG. 5
RFU-600-1C1,
-1X, -3, -3B1

FIG. 6
RFU-600-2

FIG. 7
RFU-600-5, -5C1

PHOTOS FOR REFERENCE ONLY, SHOWN AT 100% ACTUAL SIZE.

FOR MOUNTING CONFIGURATIONS REFER TO PAGES 137-151

For more information or custom products call us or go to our website. See cover for contact information.

FIG. 8
RFU-600-6, -6C1

FIG. 9
RFU-600-7

FIG. 10
RFU-601-1, 1P, -1X, -3, -5, -B1, -C1

FIG. 11
RFU-601-4

FIG. 12
RFU-602

FIG. 13
RFU-602-1

FIG. 14
RFU-602-1SPL

FIG. 15
RFU-602-2

PHOTOS FOR REFERENCE ONLY, SHOWN AT 100% ACTUAL SIZE.

FOR MOUNTING CONFIGURATIONS REFER TO PAGES 137-151

PART #	FIG	DESCRIPTION	CBL GRP	NOTES		PLATING			RECOM-MENDED TOOL
						BDY	P/C	DIE	
RFU-600	1	MALE PUSH-ON FERRULE	C	NO INSTALLATION TOOLS NEEDED, FOR RG-58/U	AMPHENOL 81-0103	N	S	T	RFA-4005-301
RFU-600-1	2	MALE CRIMP	C	AMP DRAWN METAL TYPE, FOR RG-58/U		N	G	D	RFA-4005-301
RFU-600-1C1	5	MALE CRIMP	C1	FOR RG-142/U		N	G	D	RFA-4005-301
RFU-600-10C	4	MALE R/A CRIMP	C	FOR RG-58/U		N	G	T	RFA-4009-206
RFU-600-10C-03	4	MALE R/A CRIMP	C	FOR RG-58/U	ROLLER CRIMP SHELL	N	G	T	RFA-4009-206
RFU-600-10C1	4	MALE R/A CRIMP	C1	FOR RG-142/U		N	G	T	RFA-4009-206
RFU-600-1P	3	MALE CRIMP	P	FOR PROFLEX		N	G	D	RFA-4009-203
RFU-600-1X	5	MALE CRIMP	X	FOR RG-8X & TIMES LMR-240	AMPHENOL 81-114	N	G	D	RFA-4009-203
RFU-600-2	6	MALE CRIMP	C	SHORT, DIECAST ZINC, FOR ONAGLASS ANTENNAS, BLACK, FOR RG-58/U	AMPHENOL 81-115BK-1000	C	G	D	RFA-4009-206
RFU-600-3	5	MALE CRIMP	B	FOR RG-174/U		N	G	T	RFA-4009-204
RFU-600-3B1	5	MALE CRIMP	B1	FOR RG-316/U DOUBLE SHIELD		N	G	T	RFA-4009-204
RFU-600-5	7	MALE CRIMP	C	QUICK DISCONNECT, FOR RG-58/U		N	G	D	RFA-4009-206
RFU-600-5C1	7	MALE CRIMP	C1	FOR RG-142/U		N	G	D	RFA-4009-206
RFU-600-6	8	MALE CRIMP	C	FOR RG-58/U	AMP 2266-001, AMPHENOL 81-115	N	S	D	RFA-4009-206
RFU-600-6C1	8	MALE CRIMP	C1	FOR RG-142/U		N	S	D	RFA-4009-206
RFU-600-7	9	MALE CRIMP	C3, M	FOR MOTOROLA WHITE TEFLON & BELDEN 89907		N	G	T	RFA-4009-206
RFU-601-1	10	FEMALE CRIMP	C	FOR RG-58/U	AMP 2266-02-1, AMPHENOL 81-116	N	S	D	RFA-4009-206
RFU-601-1P	10	FEMALE CRIMP	P	FOR PROFLEX		N	S	D	RFA-4009-203
RFU-601-1X	10	FEMALE CRIMP	X	FOR RG-8X & TIMES LMR-240	AMPHENOL 81-117	N	S	T	RFA-4009-203
RFU-601-3	10	FEMALE CRIMP	B	FOR RG-174/U		N	G	T	RFA-4009-204
RFU-601-4	11	FEMALE CRIMP	X	FOR RG-8X & TIMES LMR-240		N	G	D	RFA-4009-203
RFU-601-5	10	FEMALE CRIMP	D	FOR RG-59/U		N	G	D	RFA-4009-203
RFU-601-B1	10	FEMALE CRIMP	B1	FOR RG-316/U DOUBLE SHIELD		N	G	T	RFA-4009-204
RFU-601-C1	10	FEMALE CRIMP	C1	FOR RG-142/U		N	S	D	RFA-4009-206
RFU-602	12	FEMALE BULKHEAD		FRONT MOUNT WITH D-FLAT		N	G	T	
RFU-602-1	13	FEMALE BULKHEAD		REAR MOUNT, WITH .5" THREADED LENGTH & D-FLAT		N	S	T	
RFU-602-1SPL	14	FEMALE BULKHEAD		REAR MOUNT, WITH .92" THREADED LENGTH & DOUBLE D-FLAT		N	S	T	
RFU-602-2	15	FEMALE BULKHEAD		REAR MOUNT, WITH .6" THREADED LENGTH & D-FLAT	AMPHENOL 81-120	N	S	T	

MINI-UHF CONNECTORS AND IN-SERIES ADAPTERS — continued

FIG. 16
RFU-602-3

FIG. 17
RFU-603, -1

FIG. 18
RFU-603-2

FIG. 19
RFU-606-5

FIG. 20
RFU-617-B, -B1

FIG. 21
RFU-624

FIG. 22
RFU-629

FIG. 23
RFU-630

FIG. 24
RFU-630-1

FIG. 25
RFU-630-6, -7, -8

FIG. 26
RFU-631

FIG. 27
RFU-632

FIG. 28
RFU-643

PHOTOS FOR REFERENCE ONLY, SHOWN AT 100% ACTUAL SIZE.

FOR MOUNTING CONFIGURATIONS REFER TO PAGES 137-151

PART #	FIG	DESCRIPTION	CBL GRP	NOTES		PLATING			RECOM-MENDED TOOL
						BDY	P/C	DIE	
RFU-602-3	16	FEMALE BULKHEAD		REAR MOUNT, WITH 1" THREADED LENGTH & DOUBLE D-FLAT		N	S	T	
RFU-603	17	FEMALE PANEL MOUNT		4 HOLE FLANGE	AMP 226601-1, AMPHENOL 81-118	N	G	T	
RFU-603-1	17	FEMALE PANEL MOUNT		4 HOLE FLANGE, DIECAST ZINC		N	S	B	
RFU-603-2	18	FEMALE PANEL MOUNT		2 HOLE FLANGE SHORT, BLACK BODY, DIECAST ZINC		C	G	D	
RFU-606-5	19	FEMALE RIGHT ANGLE PCB				T	T	P	
RFU-617-B	20	FEMALE CRIMP BULKHEAD	B	REAR MOUNT, FOR RG-174/U	AMP 228903-4	N	G	D	RFA-4009-204
RFU-617-B1	20	FEMALE CRIMP BULKHEAD	B1	FOR RG-316/U DOUBLE SHIELD		N	G	D	RFA-4009-204
RFU-624	21	ADAPTER		MINI UHF MALE TO MINI-UHF MALE		N	G	T	
RFU-629	22	BARREL ADAPTER		MINI UHF FEMALE TO MINI UHF FEMALE	MOTOROLA 5580367B30	N	G	T	
RFU-630	23	RIGHT ANGLE ADAPTER		MINI UHF MALE TO MINI UHF FEMALE, MITERED		N	G	T	
RFU-630-1	24	RIGHT ANGLE ADAPTER		MINI UHF MALE TO 2.5"" EXT. MINI UHF FEMALE, BLACK BODY	AMPHENOL 81-121	C	G	T	
RFU-630-6	25	RIGHT ANGLE ADAPTER		MINI UHF MALE TO MINI UHF FEMALE, WITH SQUARE BODY	MOTOROLA 58C83488R02	N	G	T	
RFU-630-7	25	RIGHT ANGLE ADAPTER		MINI UHF MALE TO MINI UHF FEMALE, WITH SQUARE BODY		N	T	T	
RFU-630-8	25	RIGHT ANGLE ADAPTER		MINI UHF MALE TO MINI UHF FEMALE, WITH SQUARE BODY	MOTOROLA 58C80643E01	N	T	T	
RFU-631	26	T-ADAPTER		MINI UHF MALE TO MINI UHF DOUBLE FEMALE		N	S	T	
RFU-632	27	T-ADAPTER		MINI UHF TRIPLE FEMALE		N	S	T	
RFU-643	28	ADAPTER		MINI UHF MALE QUICK DISCONNECT TO MINI UHF FEMALE		N	G	T	

For more information or custom products call us or go to our website. See cover for contact information.

WiFi and Broadband

(FCC Part 15 Unique Connectors)

SPECIFICATIONS	CABLE GROUPS	
	GRP	**FOR THESE CABLE TYPES**
REFER TO INDIVIDUAL STANDARD INTERFACES OR CONTACT MANUFACTURER	A	RG-178, 178A, 178B, 196, 196A/U; BELDEN 83265
	B	TIMES LMR-100A; RG-174, 188, 188A, 316/U; ALPHA 9174, 9316; BELDEN 7805A, 8216, 83269, 83284, 84316; COMMSCOPE AMC-174
	B1	RG-316/U DOUBLE SHIELD; RD-316
PLATING G - GOLD N - NICKEL S - SILVER SS - STAINLESS STEEL	C	TIMES LMR-195; RG-58, 58A, 58C, 141, 141A/U; ANDREW CNT-195, CNT-195-DB, CNT-195-FR; BELDEN 8219, 8240, 8259, 8262, 9201, 9203, 9310, 9311; COMMSCOPE WBC-195, WBC-195R, 0268, TCOM-195, TCOM-195-FR; HARBOUR HPF195
	C1	RG-55, 55A, 55B, 142, 142A, 142B, 223, 400/U; ALPHA 9055, 9055B, 9223; BELDEN 7806A, 83242, 84142
	C2	TIMES LMR-200, MSI-22; ALPHA 9848; BELDEN 7807A; COMMSCOPE AMC-58, WBC-200, WBC-200R, TCOM-200, TCOM-200-FR; HARBOUR HPF200
DIELECTRIC MATERIAL D - DELRIN T - TEFLON	C3	G-58/U PLENUM, RG-122/U; ALPHA 9859, 9158S; BELDEN 82240, 82907, 88240, 89907
	I	TIMES AA-5886, AA-6146, LMR-400, LMR-400 ULTRAFLEX; ANDREW CNT-400, CNT-400AL, CNT-400-DB, CNT-400-FR, CNT-400-FRP; BELDEN 7810A, 8214, 9913; COMMSCOPE TCOM-400, TCOM-400-FR, TCOM-400-PUR, WBC-400, WBC-400R, CUSHCRAFT ULTRALINK TL93605; HARBOUR HPF400
	L6	TIMES LMR-300; ANDREW CNT-300, CNT-300AL, CNT-300-DB, CNT-300-FR; BELDEN 7809; COMMSCOPE TCOM-300, TCOM-300-FR, WBC-300
	S	RG-161, 179, 179A, 187, 187A/U; BELDEN 1520A, 1521A, 1522A, 9221; COMMSCOPE 15-55340
	X	TIMES LMR-240, LMR-240 ULTRAFLEX; RG-8X; ANDREW CNT-240, CNT-240AL, CNT-240ALS, CNT-240-DB, CNT-240-FR, CNT-240-W; BELDEN 9258; COMMSCOPE TCOM-240, TCOM-240-FR, WBC-240, WBC-240R; HARBOUR HPF240; MICRO 8/U; REMEE 1600; SAXTON 8315;
	FOR A MORE EXTENSIVE LISTING OF CABLE GROUPS, PLEASE REFER TO PAGES 131-133.	

FIG. 1
RDM-6310-B
(shown at 200% size)

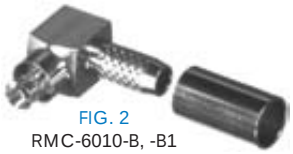

FIG. 2
RMC-6010-B, -B1
(shown at 200% size)

FIG. 3
RP-700-179-1
(shown at 150% size)

FIG. 4
RP-1005-C

FIG. 5
RP-1006-3I

FIG. 6
RP-1028-I

FIG. 7
RP-1106-C, -C1, -C2

PHOTOS FOR REFERENCE ONLY, SHOWN AT 100% ACTUAL SIZE UNLESS OTHERWISE INDICATED.

FOR MOUNTING CONFIGUATIONS REFER TO PAGES 137-151

PART #	FIG	DESCRIPTION	CBL GRP	NOTES	PLATING			RECOM-MENDED TOOL
					BDY	P/C	DIE	
RDM-6310-B	1	MALE CRIMP RIGHT-ANGLE	B	FOR AP-600, RF-316/U	N	G	T	RFA-4009-204
RMC-6010-B	2	MALE CRIMP RIGHT-ANGLE	B	MC CARD, RF-316/U	N	G	T	RFA-4009-204
RMC-6010-B1	2	MALE CRIMP RIGHT-ANGLE	B1	MC CARD, RF-316/U	N	G	T	RFA-4009-204
RP-700-179-1	3	SSMB MALE CRIMP	S	REVERSE POLARITY [GENDER], FOR RG-179/U	N	G	T	RFA-4009-204
RP-1005-C	4	N MALE CRIMP	C	REVERSE POLARITY [GENDER], FOR RG-58/U	N	G	T	RFA-4009-206
RP-1006-3I	5	N MALE CRIMP	I	REVERSE POLARITY [GENDER], FOR BELDEN 9913 & TIMES LMR-400	N	G	T	RFA-4009-205
RP-1028-I	6	N FEMALE CRIMP	I	REVERSE POLARITY [GENDER], FOR BELDEN 9913 & TIMES LMR-400	N	G	T	RFA-4009-205
RP-1106-C	7	BNC MALE CRIMP	C	REVERSE POLARITY [GENDER], FOR RG-58/U	N	G	T	RFA-4009-206
RP-1106-C1	7	BNC MALE CRIMP	C1	REVERSE POLARITY [GENDER], FOR RG-142/U	N	G	T	RFA-4009-206
RP-1106-C2	7	BNC MALE CRIMP	C2	REVERSE POLARITY [GENDER], FOR LMR-200	N	G	T	RFA-4009-206

FIG. 8
RP-1116-NG

FIG. 9
RP-1117-BT

FIG. 10
RP-1117-C, -C1

FIG. 11
RP-1202-1B,
-1B1, -C3

FIG. 12
RP-1202-C,
-C1, -C2, -X

FIG. 13
RP-1202-I, -L6

FIG. 14
RP-1210

FIG. 15
RP-1211-1

PHOTOS FOR REFERENCE ONLY, SHOWN AT 100% ACTUAL SIZE UNLESS OTHERWISE INDICATED.

FOR MOUNTING CONFIGUATIONS REFER TO PAGES 137-151

PART #	FIG	DESCRIPTION	CBL GRP	NOTES	PLATING			RECOM-MENDED TOOL
					BDY	P/C	DIE	
RP-1116-NG	8	BNC FEMALE BULKHEAD		REVERSE POLARITY [GENDER], FRONT MOUNT W/ D FLAT	N	G	T	
RP-1117-BT	9	BNC FEMALE CRIMP BULKHEAD	B	REVERSE POLARITY [GENDER], FOR RG-174/U	N	G	T	RFA-4009-204
RP-1117-C	10	BNC FEMALE CRIMP BULKHEAD	C	REVERSE POLARITY [GENDER], FOR RG-58/U	N	G	T	RFA-4009-206
RP-1117-C1	10	BNC FEMALE CRIMP BULKHEAD	C1	REVERSE POLARITY [GENDER], FOR RG-142/U	N	G	T	RFA-4009-206
RP-1202-1B	11	TNC MALE CRIMP	B	REVERSE POLARITY [GENDER], FOR RG-174/U	N	G	T	RFA-4009-204
RP-1202-1B1	11	TNC MALE CRIMP	B1	REVERSE POLARITY [GENDER], FOR RG-316/U DOUBLE SHIELD	N	G	T	RFA-4009-204
RP-1202-C	12	TNC MALE CRIMP	C	REVERSE POLARITY [GENDER], FOR RG-58/U	N	G	T	RFA-4009-206
RP-1202-C1	12	TNC MALE CRIMP	C1	REVERSE POLARITY [GENDER], FOR RG-142/U	N	G	T	RFA-4009-206
RP-1202-C2	12	TNC MALE CRIMP	C2	REVERSE POLARITY [GENDER], FOR LMR-200	N	G	T	RFA-4009-206
RP-1202-C3	11	TNC MALE CRIMP	C3, M	REVERSE POLARITY [GENDER], FOR PLENUM RG-58/U				RFA-4009-206
RP-1202-I	13	TNC MALE CRIMP	I	REVERSE POLARITY [GENDER], FOR BELDEN 9913 & TIMES LMR-400	N	G	T	RFA-4009-205
RP-1202-L6	13	TNC MALE CRIMP	L6	REVERSE POLARITY [GENDER], FOR LMR-300	N	G	T	RFA-4005-308
RP-1202-X	12	TNC MALE CRIMP	X	REVERSE POLARITY [GENDER], FOR LMR-240	N	G	T	RFA-4009-203
RP-1210	14	TNC FEMALE CHASSIS		REVERSE POLARITY [GENDER], 4 HOLE FLANGE MOUNT	N	G	T	
RP-1211-1	15	TNC FEMALE BULKHEAD		REVERSE POLARITY [GENDER], FRONT MOUNT W/ D FLAT & SOLDER CUP	N	G	T	

FIG. 16
RP-1212-A

FIG. 17
RP-1212-B, -B1

FIG. 18
RP-1212-C, -C1,
-C1-03, -C2,

FIG. 19
RP-1212-C3

FIG. 20
RP-1216-C,
-C1, -C2

FIG. 21
RP-1216-C3

FIG. 22
RP-1216-I

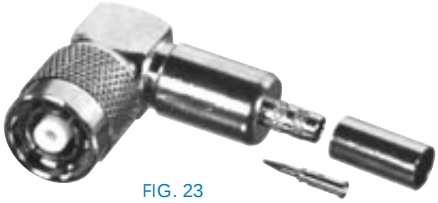

FIG. 23
RP-1218

PHOTOS FOR REFERENCE ONLY, SHOWN AT 100% ACTUAL SIZE UNLESS OTHERWISE INDICATED.

FOR MOUNTING CONFIGUATIONS REFER TO PAGES 137-151

PART #	FIG	DESCRIPTION	CBL GRP	NOTES	PLATING			RECOM-MENDED TOOL
					BDY	P/C	DIE	
RP-1212-A	16	TNC FEMALE BULKHEAD CRIMP	A	REAR MOUNT, REVERSE POLARITY [GENDER], FOR RG-178/U	N	G	T	RFA-4009-204
RP-1212-B	17	TNC FEMALE BULKHEAD CRIMP	B	REAR MOUNT, REVERSE POLARITY [GENDER], FOR RG-174/U	N	G	T	RFA-4009-204
RP-1212-B1	17	TNC FEMALE BULKHEAD CRIMP	B1	REAR MOUNT, REVERSE POLARITY [GENDER], FOR RG-316/U DOUBLE SHIELD	N	G	T	RFA-4009-204
RP-1212-C	18	TNC FEMALE BULKHEAD CRIMP	C	REAR MOUNT, REVERSE POLARITY [GENDER], FOR RG-58/U	N	G	T	RFA-4009-206
RP-1212-C1	18	TNC FEMALE BULKHEAD CRIMP	C1	REAR MOUNT, REVERSE POLARITY [GENDER], FOR RG-142/U	N	G	T	RFA-4009-206
RP-1212-C1-03	18	TNC FEMALE BULKHEAD CRIMP	C1	REAR MOUNT, REVERSE POLARITY [GENDER], FOR RG-142/U & RG-400 ONLY	N	G	T	RFA-4009-206
RP-1212-C2	18	TNC FEMALE BULKHEAD CRIMP	C2	REAR MOUNT, REVERSE POLARITY [GENDER], FOR LMR-200	N	G	T	RFA-4009-206
RP-1212-C3	19	TNC FEMALE BULKHEAD CRIMP	C3, M	REAR MOUNT, REVERSE POLARITY [GENDER], FOR PLENUM RG-58/U	N	G	T	RFA-4009-206
RP-1216-C	20	TNC FEMALE CRIMP	C	REVERSE POLARITY [GENDER], FOR RG-58/U	N	G	T	RFA-4009-206
RP-1216-C1	20	TNC FEMALE CRIMP	C1	REVERSE POLARITY [GENDER], FOR RG-142/U	N	G	T	RFA-4009-206
RP-1216-C2	20	TNC FEMALE CRIMP	C2	REVERSE POLARITY [GENDER], FOR TIMES LMR-200	N	G	T	RFA-4009-206
RP-1216-C3	21	TNC FEMALE CRIMP	C3, M	REVERSE POLARITY [GENDER], FOR PLENUM RG-58/U	N	G	T	RFA-4009-206
RP-1216-I	22	TNC FEMALE CRIMP	I	REVERSE POLARITY [GENDER], FOR BELDEN 9913 & TIMES LMR-400	N	G	T	RFA-4009-205
RP-1218	23	TNC MALE RIGHT ANGLE CRIMP	C	REVERSE POLARITY [GENDER], FOR RG-58/U	N	G	T	RFA-4009-206

FIG. 24
RP-3000-1B, -1B1, -B, -B1

FIG. 25
RP-3000-1C, -1C1, 1X, -C, -C1, -C2
RPT -3000-1C, -C

FIG. 26
RP-3000-I

FIG. 27
RP-3010-1B, -1B1

FIG. 28
RP-3010-1C, -1C1

FIG. 29
RP-3050-1B, -1B1

FIG. 30
RP-3050-1C, -1C1, 1C2

FIG. 31
RP-3251-1

FIG. 32
RP-3252-1B1, RSA-3252-1B

PHOTOS FOR REFERENCE ONLY, SHOWN AT 100% ACTUAL SIZE UNLESS OTHERWISE INDICATED.

FOR MOUNTING CONFIGUATIONS REFER TO PAGES 137-151

PART #	FIG	DESCRIPTION	CBL GRP	NOTES	PLATING			RECOM-MENDED TOOL
					BDY	P/C	DIE	
RP-3000-1B	24	SMA MALE CRIMP	B	REVERSE POLARITY [GENDER], FOR RG-174/U, INCLUDES HEAT SHRINK	G	G	T	RFA-4009-204
RP-3000-1B1	24	SMA MALE CRIMP	B1	REVERSE POLARITY [GENDER], FOR RG-316/U DOUBLE SHIELD, INCLUDES HEAT SHRINK	G	G	T	RFA-4009-204
RP-3000-1C	25	SMA MALE CRIMP	C	REVERSE POLARITY [GENDER], FOR RG-58/U	G	G	T	RFA-4009-206
RP-3000-1C1	25	SMA MALE CRIMP	C1	REVERSE POLARITY [GENDER], FOR RG-142/U	G	G	T	RFA-4009-206
RP-3000-1X	25	SMA MALE CRIMP	X	REVERSE POLARITY [GENDER], FOR TIMES LMR-240	G	G	T	RFA-4009-203
RP-3000-B	24	SMA MALE CRIMP	B	REVERSE POLARITY [GENDER], FOR RG-174/U, INCLUDES HEAT SHRINK	N	G	T	RFA-4009-204
RP-3000-B1	24	SMA MALE CRIMP	B1	REVERSE POLARITY [GENDER], FOR RG-316/U DOUBLE SHIELD, INCLUDES HEAT SHRINK	N	G	T	RFA-4009-204
RP-3000-C	25	SMA MALE CRIMP	C	REVERSE POLARITY [GENDER], FOR RG-58/U	N	G	T	RFA-4009-206
RP-3000-C1	25	SMA MALE CRIMP	C1	REVERSE POLARITY [GENDER], FOR RG-142/U	N	G	T	RFA-4009-206
RP-3000-C2	25	SMA MALE CRIMP	C2	REVERSE POLARITY [GENDER], FOR TIMES LMR-200	N	G	T	RFA-4009-206
RP-3000-I	26	SMA MALE CRIMP	I	REVERSE POLARITY [GENDER], FOR BELDEN 9913 & TIMES LMR-400	N	G	T	RFA-4009-205
RP-3010-1B	27	SMA MALE RIGHT ANGLE CRIMP	B	REVERSE POLARITY [GENDER], FOR RG-174/U	G	G	T	RFA-4009-204
RP-3010-1B1	27	SMA MALE RIGHT ANGLE CRIMP	B1	REVERSE POLARITY [GENDER], FOR RG-316/U DOUBLE SHIELD	G	G	T	RFA-4009-204
RP-3010-1C	28	SMA MALE RIGHT ANGLE CRIMP	C, C2	REVERSE POLARITY [GENDER], FOR RG-58/U, LMR-200	G	G	T	RFA-4009-206
RP-3010-1C1	28	SMA MALE RIGHT ANGLE CRIMP	C1	REVERSE POLARITY [GENDER], FOR RG-142/U	G	G	T	RFA-4009-206
RP-3050-1B	29	SMA FEMALE CRIMP	B	REVERSE POLARITY [GENDER], FOR RG-174/U	G	G	T	RFA-4009-204
RP-3050-1B1	29	SMA FEMALE CRIMP	B1	REVERSE POLARITY [GENDER], FOR RG-316/U DOUBLE SHIELD	G	G	T	RFA-4009-204
RP-3050-1C	30	SMA FEMALE CRIMP	C	REVERSE POLARITY [GENDER], FOR RG-58/U	G	G	T	RFA-4009-206
RP-3050-1C1	30	SMA FEMALE CRIMP	C1	REVERSE POLARITY [GENDER], FOR RG-142/U	G	G	T	RFA-4009-206
RP-3050-1C2	30	SMA FEMALE CRIMP	C2	REVERSE POLARITY [GENDER], FOR TIMES LMR-200	G	G	T	RFA-4009-206
RP-3251-1	31	SMA FEMALE BULKHEAD		FRONT MOUNT, REVERSE POLARITY [GENDER] WITH SOLDER CUP & D-FLAT	G	G	T	
RP-3252-1B1	32	SMA FEMALE BULKHEAD CRIMP	B1	REAR MOUNT, REVERSE POLARITY [GENDER], FOR RG-316/U DOUBLE SHIELD	G	G	T	RFA-4009-204
RSA-3252-1B	32	SMA FEMALE BULKHEAD W/O GASKET	B	REVERSE POLARITY [GENDER], FOR RG-174/U, RG-316/U	G	G	T	

FIG. 33
RP-3252-A-06

FIG. 34
RP-3300, -1

FIG. 35
RP-4252-B
(shown at 150% size)

FIG. 36
RP-9000-1B
(shown at 200% size)

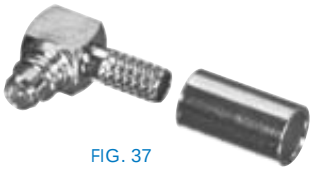

FIG. 37
RP-9010-1B
(shown at 200% size)

FIG. 38
RT-1005-C, -C1

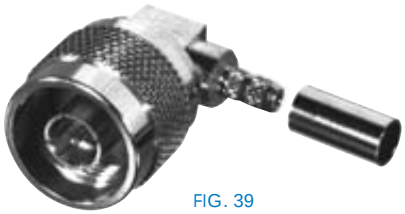

FIG. 39
RT-1009-C1-03

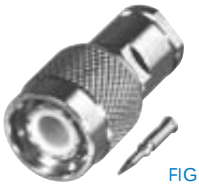

FIG. 40
RT-1200-C

PHOTOS FOR REFERENCE ONLY, SHOWN AT 100% ACTUAL SIZE UNLESS OTHERWISE INDICATED.

FOR MOUNTING CONFIGUATIONS REFER TO PAGES 137-151

PART #	FIG	DESCRIPTION	CBL GRP	NOTES	PLATING			RECOM-MENDED TOOL
					BDY	P/C	DIE	
RP-3252-A-06	33	SMA FEMALE BULKHEAD CRIMP	A	REAR MOUNT, REVERSE POLARITY [GENDER], FOR RG-178/U	SS	G	T	RFA-4009-206
RP-3300	34	SMA FEMALE RIGHT ANGLE PCB MOUNT		REVERSE POLARITY [GENDER], MOUNTING .2" O/C	N	G	T	
RP-3300-1	34	SMA FEMALE RIGHT ANGLE PCB MOUNT		REVERSE POLARITY [GENDER], MOUNTING .2" O/C	G	G	T	
RP-4252-B	35	SMB FEMALE BULKHEAD CRIMP	B	REAR MOUNT, REVERSE POLARITY [GENDER], FOR RG-174/U	N	G	T	RFA-4009-204
RP-9000-1B	36	MMCX MALE CRIMP	B	REVERSE POLARITY [GENDER], FOR RG-174/U	G	G	T	RFA-4009-204
RP-9010-1B	37	MMCX MALE RIGHT ANGLE CRIMP	B	REVERSE POLARITY [GENDER], FOR RG-174/U	G	G	T	RFA-4009-204
RPT-3000-1C	25	SMA MALE CRIMP	C	REVERSE POLARITY [GENDER] AND REVERSE THREAD, FOR RG-58/U	G	G	T	RFA-4009-206
RPT-3000-C	25	SMA MALE CRIMP	C	REVERSE POLARITY [GENDER] AND REVERSE THREAD, FOR RG-58/U	N	G	T	RFA-4009-206
RSA-3252-1B	32	SMA FEMALE BULKHEAD CRIMP	B	REAR MOUNT, REVERSE POLARITY [GENDER], FOR RG-174/U	G	G	T	RFA-4009-204
RT-1005-C	38	N MALE CRIMP	C	LEFT HAND THREAD, FOR RG-58/U	N	G	T	RFA-4009-206
RT-1005-C1	38	N MALE CRIMP	C	LEFT HAND THREAD, FOR RG-58/U	N	G	T	RFA-4009-206
RT-1009-C1-03	39	N MALE RIGHT ANGLE CRIMP	C1	LEFT HAND THREAD, FOR RG-142/U	N	G	T	RFA-4009-206
RT-1200-C	40	TNC MALE CLAMP	C, C1	LEFT HAND THREAD, FOR RG-58/U & RG-142/U	N	S	T	RFA-4009-206

FIG. 41
RT-1200-1

FIG. 42
RT-1202-C, -C1

FIG. 43
RT-1202-I

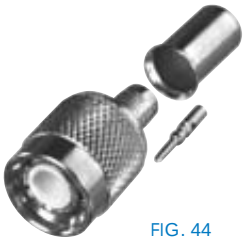

FIG. 44
RT-1203-1X

FIG. 45
RT-1208

FIG. 46
RT-1211-1

FIG. 47
RT-3000-1C, -1C1

FIG. 48
RT-3252-1B-04,
-1B1-04

FIG. 49
RT-3252-1C, -1C1

PHOTOS FOR REFERENCE ONLY, SHOWN AT 100% ACTUAL SIZE UNLESS OTHERWISE INDICATED.

FOR MOUNTING CONFIGUATIONS REFER TO PAGES 137-151

PART #	FIG	DESCRIPTION	CBL GRP	NOTES	PLATING			RECOM-MENDED TOOL
					BDY	P/C	DIE	
RT-1200-I	41	TNC MALE CLAMP		LEFT HAND THREAD, FOR LMR-400	S	G	T	RFA-4005-300
RT-1202-C	42	TNC MALE CRIMP	C	LEFT HAND THREAD, FOR RG-58/U	N	G	D	RFA-4009-206
RT-1202-C1	42	TNC MALE CRIMP	C1	LEFT HAND THREAD, FOR RG-142/U	T	G	D	RFA-4009-206
RT-1202-I	43	TNC MALE CRIMP	I	LEFT HAND THREAD, FOR LMR-400	N	G	T	RFA-4009-205
RT-1203-1X	44	TNC MALE CRIMP	X	LEFT HAND THREAD, FOR RG-8/X & TIMES LMR-240	N	G	T	RFA-4005-300
RT-1208	45	TNC FEMALE RIGHT ANGLE PCB MOUNT		LEFT HAND THREAD, DIECAST BODY	N	G	D	RFA-4005-300
RT-1211-1	46	TNC FEMALE BULKHEAD		FRONT MOUNT, LEFT HAND THREAD	N	G	T	
RT-3000-1C	47	SMA MALE CRIMP	C	LEFT HAND THREAD, FOR RG-58/U, RG-141/U	G	G	T	RFA-4009-206
RT-3000-1C1	47	SMA MALE CRIMP	C1	LEFT HAND THREAD, FOR RG-142/U	G	G	T	RFA-4009-206
RT-3252-1B-04	48	SMA FEMALE CRIMP	B	LEFT HAND THREAD, FOR RG-174/U	N	G	T	RFA-4009-204
RT-3252-1B1-04	48	SMA FEMALE CRIMP	B1	LEFT HAND THREAD, FOR RG-174/U DOUBLE-SHIELD	G	G	T	RFA-4009-204
RT-3252-1C	49	SMA FEMALE CRIMP	C	LEFT HAND THREAD, FOR RG-58/U, RG-141/U	G	G	T	RFA-4009-206
RT-3252-1C1	49	SMA FEMALE CRIMP	C1	LEFT HAND THREAD, FOR RG-142/U	G	G	T	RFA-4009-206